DEVELOPMENTS

Chapter 28

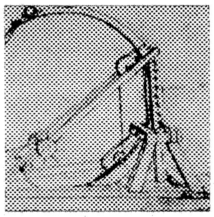

LEARNING OBJECTIVES

Upon completion of this chapter you will be able to:

1. Appreciate the significance of development and pattern drawings in the manufacturing and packaging industries.
2. Identify and define basic development classifications.
3. Become familiar with models, flat pattern developments, and joining techniques.
4. Become proficient in producing developments for prisms, pyramids, cylinders, cones, and their intersections.
5. Render true-length diagrams in order to develop surfaces with numerous edges.
6. Demonstrate knowledge of transition pieces and triangulation techniques.
7. Produce developments of spheres by the zone and gore methods.
8. Use CAD to create 2D and 3D models for developments.
9. Understand how to use automated unfold programs on 3D systems.

28.1 INTRODUCTION

Various industrial structures, products, packaging, and manufactured parts are made from flat sheet stock material. Electronic component **packaging** is one of the most common areas of engineering and design that utilizes sheet metal developments. The electronic product in Figure 28.1(a) consists of a circuit board, electronic components, cabling-wiring, and packaging employing sheet metal. The electronics were designed by means of an advanced CAD/CAM program called Pro/ECAD (Pro/ENGINEER's optional electronic component software); the sheet metal package was designed with Pro/SHEETMETAL. The assembly of the components and the package was completed with Pro/ASSEMBLY. The sheet metal package is created in its folded state and then unfolded to detail the flat pattern. A CAM program then sets up and manufactures the sheet metal forms.

The turbine in Figure 28.2(a) is an example of a complex industrial application that incorporates a sheet metal development into its design. The air intake housing was created from a sheet of metal by means of a pattern. The sheet metal enclosure for the bake-out oven in Figure 28.2(b) is composed of interlocking and welded sheet metal parts.

Parts designed to be produced from flat materials are cut from a pattern that is drawn as a **development**. The complete unfolded layout drawing of a part showing the total surface area in one view is constructed from *true-length* dimensions. This flat plane drawing shows each surface of the part as *true shape*. All surfaces of the object are connected along their adjacent *bend lines*. Sheet metal objects, cardboard packaging, large-diameter cylindrical vessels and piping, funnels, cans, and ducting are just a few of the many types of objects made from developments.

A **pattern** is made from the original development drawing and used in the fabrication shop to scribe, or set up, the true-shape configuration of a part, plus tabs, to be produced. The actual developed flat sheet configuration is then cut according to its pattern. The final operations include bend-

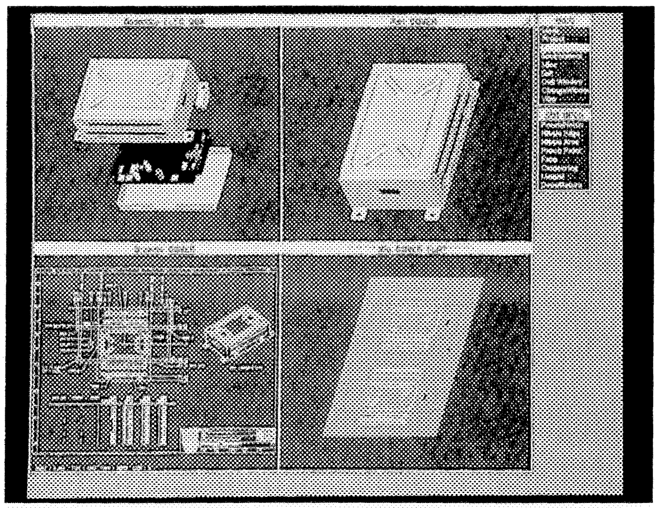

(a) Pro/ECAD used to design an electronic product

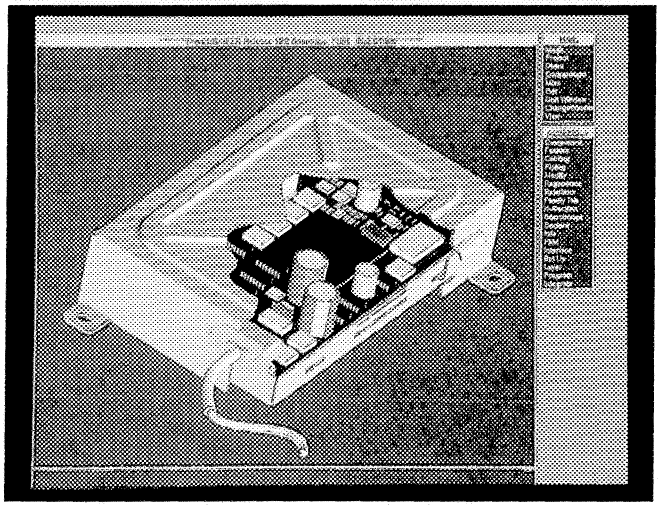

(b) Pro/SHEETMETAL used to package electronic components

FIGURE 28.1 **Electronic Component Assembly Using Sheet Metal Packaging**

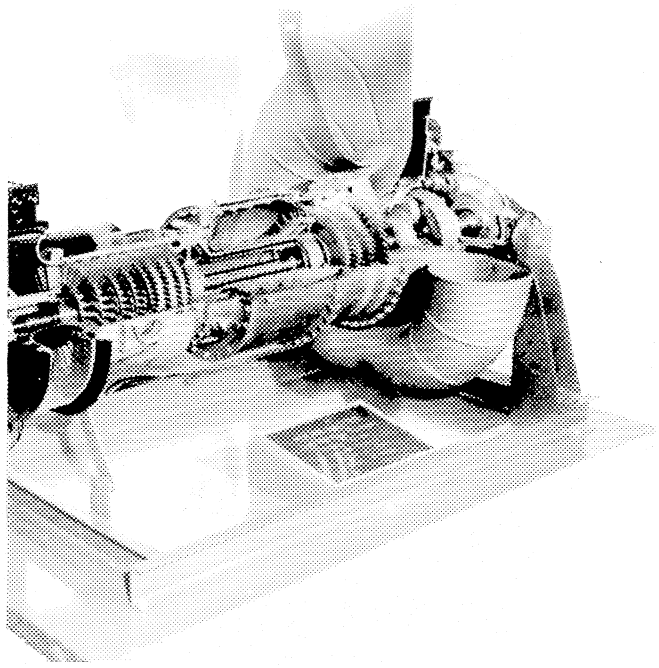

(a) Turbine and sheet metal air intake housing

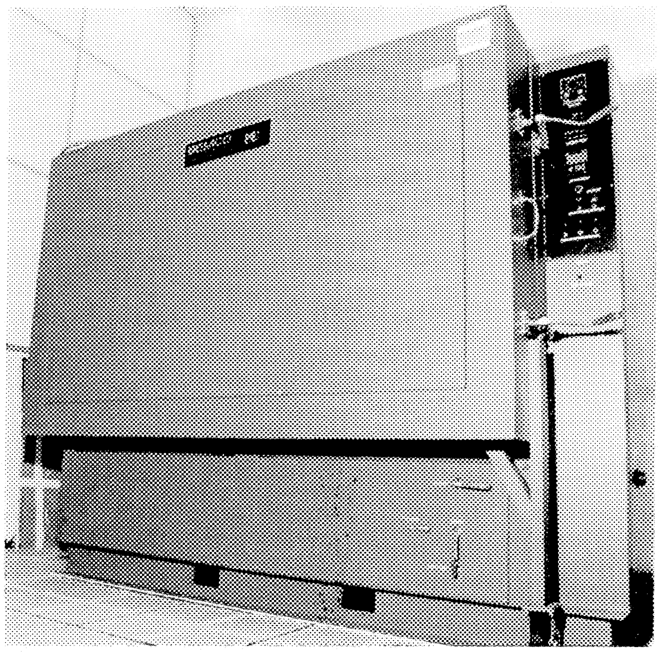

(b) Bake-out oven with sheet metal enclosure

FIGURE 28.2 **Sheet Metal Application**

ing, folding or rolling, and stretching the part to its required design. Welding, gluing, soldering, bolting, seaming, or riveting can be used to join the piece's seam edge.

28.1.1 Basic Developments

The four most common shapes that can be accurately developed include the **prism**, the **pyramid**, the **cylinder**, and the **cone**, plus their variations (Fig. 28.3). An object is normally developed by unfolding or unrolling its surfaces onto the plane of the paper. The actual drawing of the object consists of showing each successive surface as true shape and connected along common edges. One edge line serves as a **seam** for a shape composed of plane surfaces. The seam, or **break line**, for a curved shape will be along a line/element on its surface.

Each of the parts is developed as an **inside-up** pattern drawing. That is to say, it is unfolded/unrolled so that the inside surface is face up. In some cases a pattern may be required to show an outside-up development. The difference in drawing this variation is shown in the representation of the bend lines.

The prism and the pyramid in Figure 28.3(a) and (b) have been unfolded inside up so that each surface is laid flat and connected along common edges. The first line and the last line of any development represent the same line (edge),

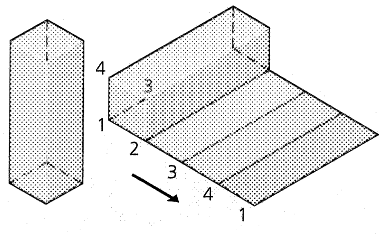

(a) Prism

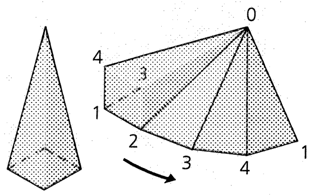

(b) Pyramid

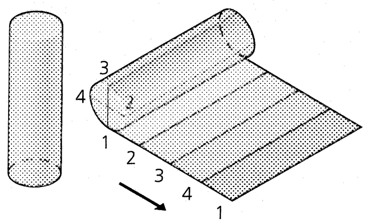

(c) Cylinder

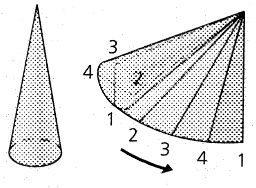

(d) Cone

FIGURE 28.3 Basic Developments

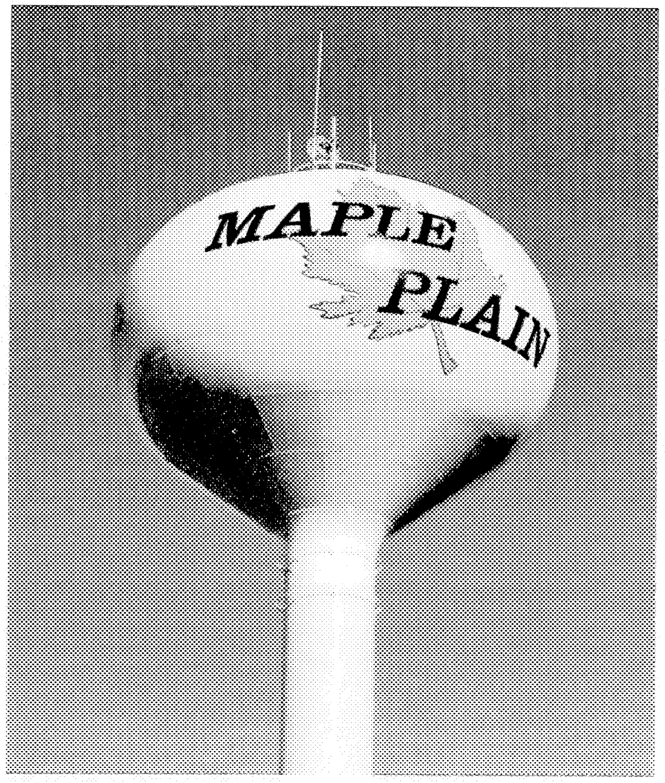

FIGURE 28.4 Ellipsoidal-Shaped Water Tower

because they will be joined together along the seam. A right prism unfolds as a rectangle. The length of the rectangle is equal to the perimeter of the base, and its width is equal to its altitude.

The cylinder and the cone in Figure 28.3(c) and (d) have been unrolled (inside up). A seam edge for these figures is along a specified line or element on their surface. A cylinder unfolds/unrolls as a rectangle, with its length equal to its circumference ($\pi \times$ **diameter**) and its height equal to its altitude. A cone develops as a portion of a circle (*sector*).

The edges of a prism and a pyramid correspond to the bend lines of the development. For a cylinder and a cone, **elements** are established along the surface, and bend lines are not required.

Parts that are composed of flat surfaces, such as prisms [Fig. 28.3(a)] and pyramid shapes, along with single-curved surfaces, such as cylinders and cones, are *developable*. In other words, they can be laid flat and constructed from a single piece of material. Double-curved and warped surfaces, on the other hand, are considered to be *undevelopable*. **Spheres**, **paraboloids**, **ellipsoids**, **oblique helicoids**, and **cylindroids** are examples of undevelopable surfaces. However, these types of surfaces can be developed adequately by *approximate methods*.

28.2 TYPES OF DEVELOPMENTS

There are four types of developments. This classification of developments is based on the shape of the surface and/or the method employed to construct its development.

Parallel line Forms that are composed of parallel straight-line elements or edges: cylinders, prisms.

Radial line Forms whose edges or elements define triangular surface areas: pyramids, cones.

Triangulation Forms whose surfaces must be broken into triangular areas to be developed. Transition pieces are the most common type of development for this category.

Approximate Forms whose surfaces cannot be truly developed, such as warped and double-curved surfaces (spheres). The water tower in Figure 28.4 is an example.

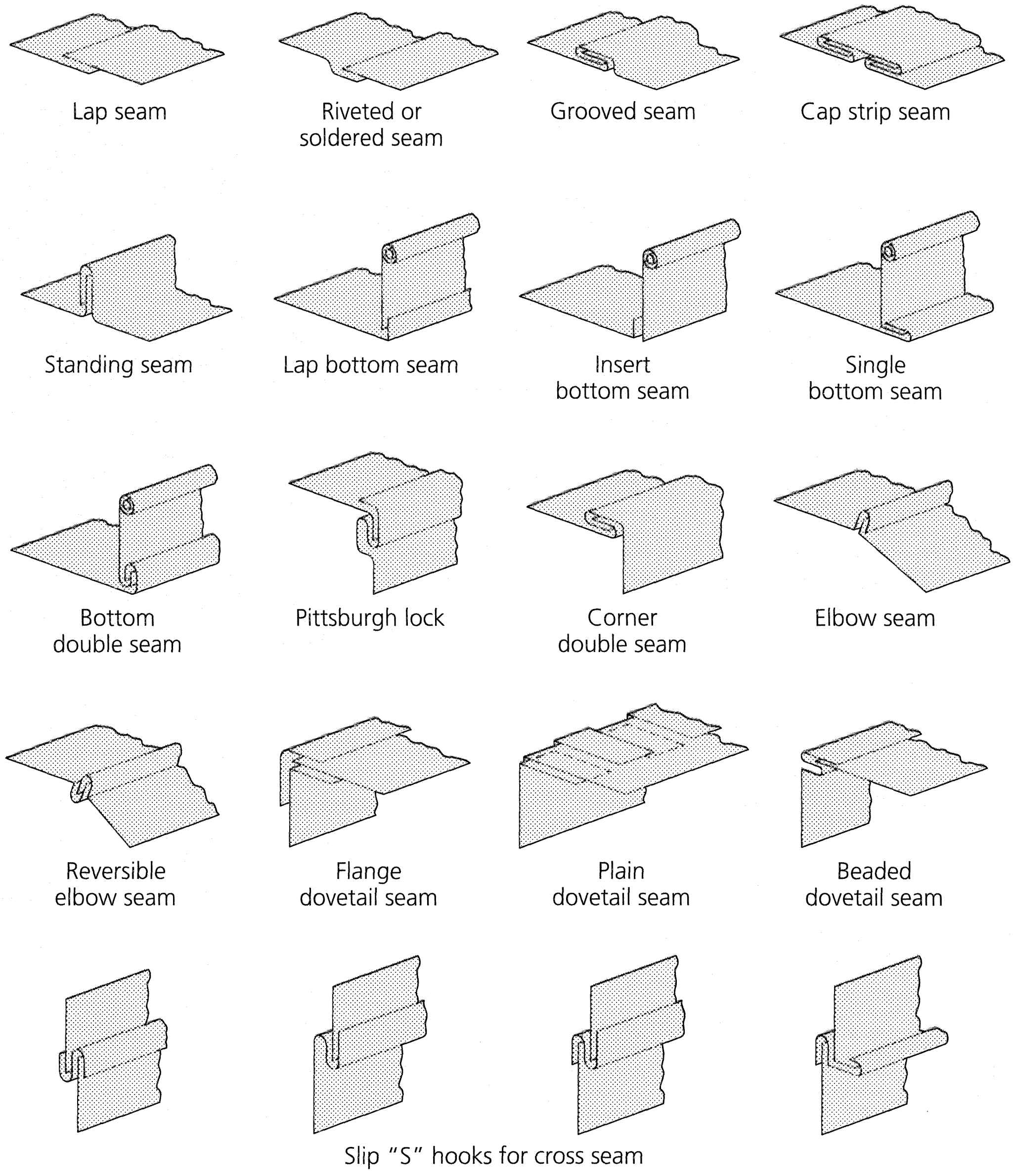

FIGURE 28.5 Standard Types of Seams Used in Sheet Metal Fabrication

28.2.1 Sheet Metal Developments

A variety of complex three-dimensional shapes are fabricated from flat sheet materials. The shape to be formed is subdivided into its simplest elements, which individually have the shapes of prisms, cylinders, cones, pyramids, or spheres. All of these shapes can be formed from a flat sheet of material by first cutting to the proper pattern and then folding or rolling the material into the three-dimensional form. Sheet metal is a typical material for developable products or parts. HVAC ducting, transition pieces, and aircraft and spacecraft bodies are made from sheet metal developments.

The fabricator, working from drawings and specifications, develops pattern drawings of each component to be produced in the fabrication shop. These patterns are usually made to the full size of the object and can only be made after the true lengths of all lines that will lie on the pattern have been determined. Because a pattern is a drawing composed entirely of true-length lines, all patterns are true shape/size. Each development must be drawn accurately so that the final product is of the correct shape within given tolerance limits.

A **bend allowance** is usually added to the pattern drawing to accommodate the space taken by the bending process. A **tab** or **lap** is added to the pattern so that the two adjoining edges that form the seam may be attached. The width of this tab/lap depends on the type of joining process. The length of the lap is normally established along the *shortest edge* so as to limit the amount and length of the seam and the cost of the joining process. Throughout this chapter a bend allowance and a lap have been eliminated from the problems and example illustrations so as not to confuse the beginner. Each development will be a *true development,* that is, one without bend allowances.

Typical seams for sheet metal are shown in Figure 28.5.

Seams can be mechanical or welded. The choice of seam is determined by the thickness and the type of metal, along with the cost of fabrication. Welded and riveted seams are considered *permanent* and are found in applications where the pieces to be joined are thicker and are of heavier-gage metals. Metal thickness is designated by gage number. From .25 in. and above, the thickness is designated by inches or metric sizes. See Appendix C for sheet metal sizes of common-gage metals.

Much of electronics packaging involves the fabrication of sheet metal parts to be used for chassis, panels, mounting plates, and a variety of enclosures and envelopes (Fig. 28.6). Sheet metal parts are typically made from a **blank** of sheet metal. Panels, mounting plates, and other parts are normally flat sheets of metal cut to the functional outline, with the proper slots and holes punched or machined per the design requirements

Sheet metal configurations such as enclosures, chassis, cages, and some cabinets are laid out as developments of the

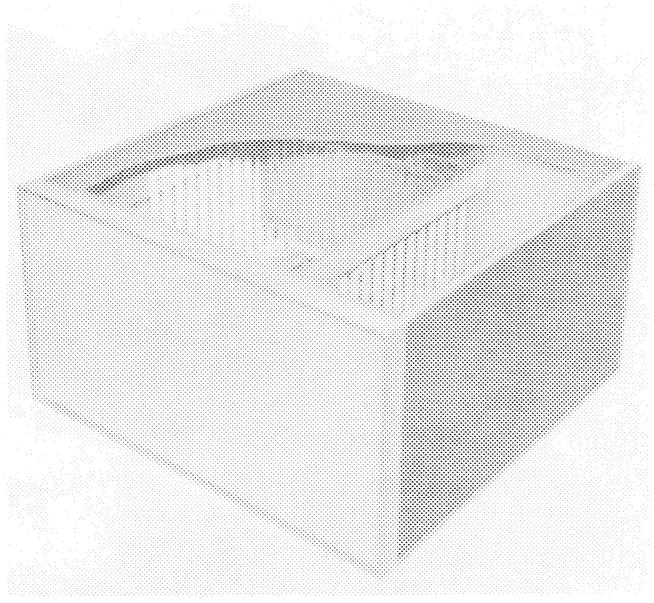

FIGURE 28.6 Sheet Metal Enclosure Used for Electronics Packaging

FIGURE 28.7 Sheet Metal Chassis for Electronic Equipment. This item was developed from a single sheet of metal shown as a pattern in Figure 28.8.

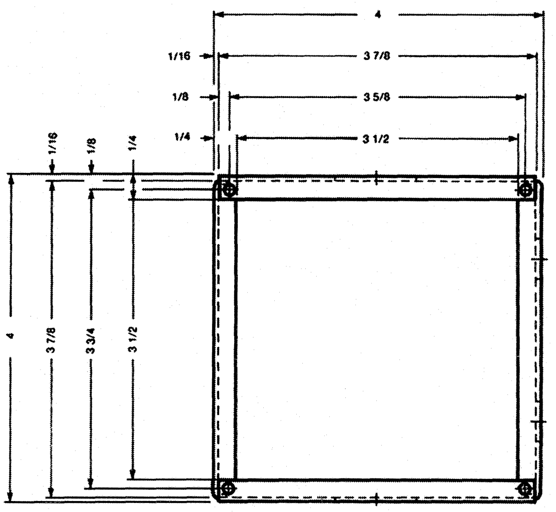

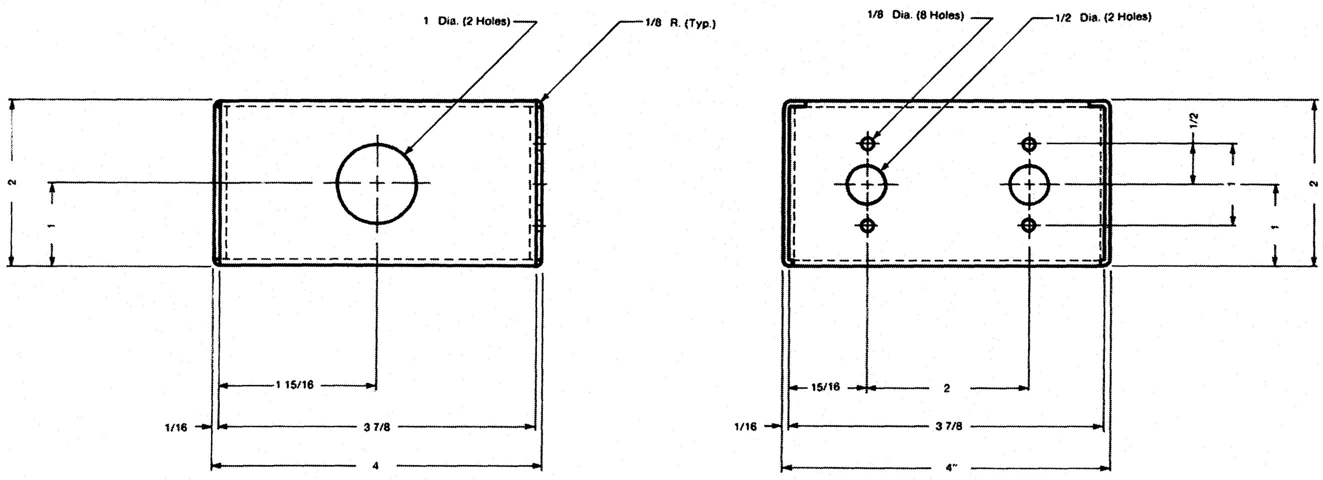

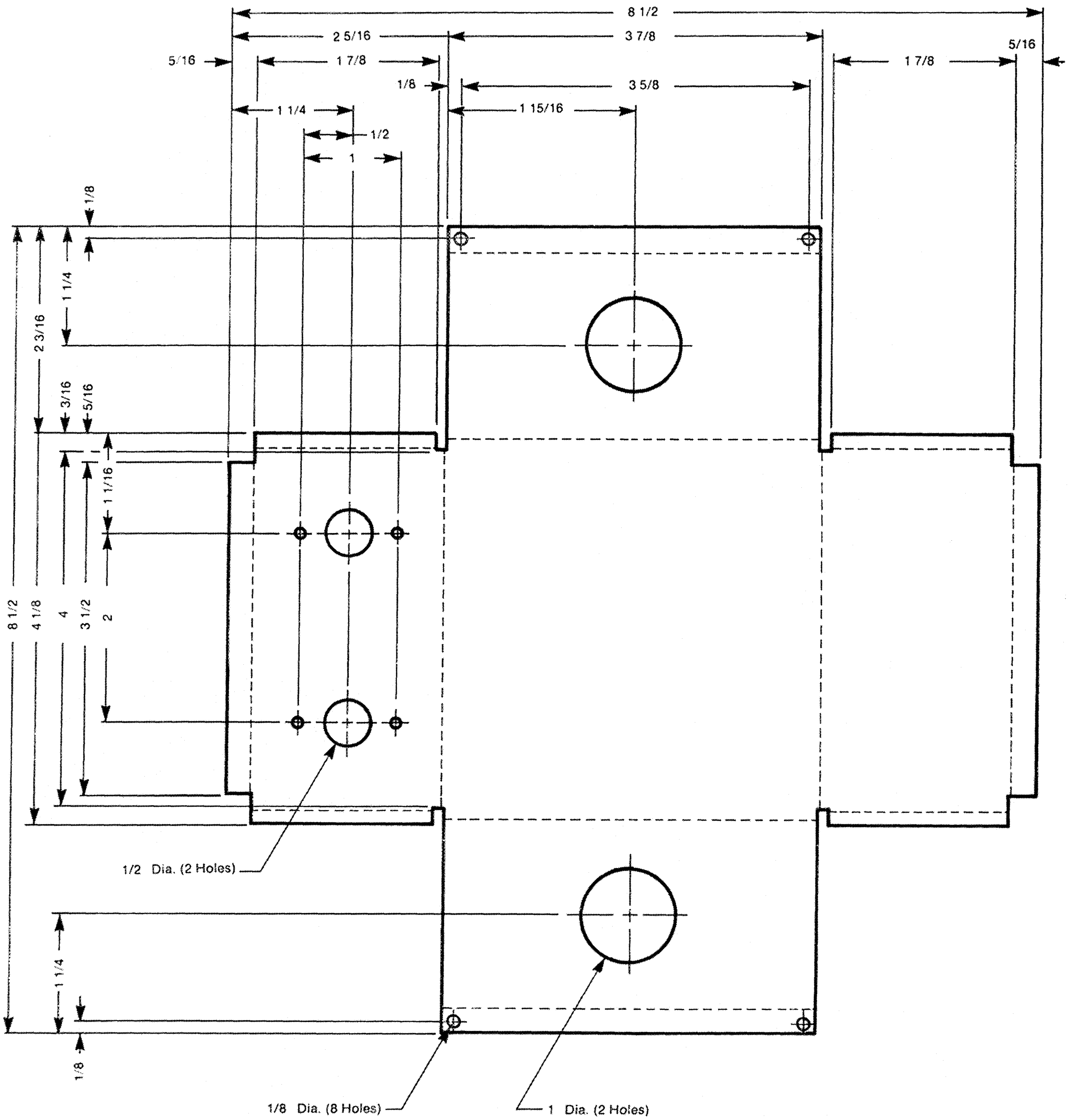

FIGURE 28.8 **Pattern Development Used to Fabricate the Enclosure Shown in Figure 28.7**

original design. The industrial drawing of the chassis enclosure shown in Figure 28.7 has been developed as an inside-up pattern in Figure 28.8. The dashed lines on the pattern development are bend lines, lines along which the flat sheet metal will be bent.

28.2.2 Automated Flat Pattern Development

CAD software programs are available for flat pattern developments. Flat pattern development on a CAD system improves the speed and accuracy of transferring 3D part models into developed flat patterns. Such programs allow the designer to unfold the planes of the 3D part model on the screen of a graphics workstation.

The series of screen displays in Figure 28.9 was generated on a CAD system. This software package includes dimensioning and programmed manufacturing. Figure 28.9 shows the sheet metal form as a 3D part model during the first stage of unbending (originally a U-shape) (a), as a finished flat pattern pictorial view (b), and as a dimensioned flat pattern shop drawing (c). The resulting flat pattern with hole requirements can be positioned in any orientation on the CRT. The pattern can be copied any number of times by means of a nesting technique. **Nesting** (see Chapter 3)

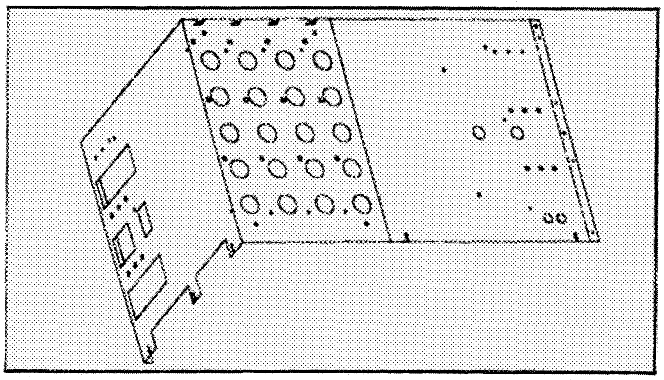

(a) The first stage of unbending is complete

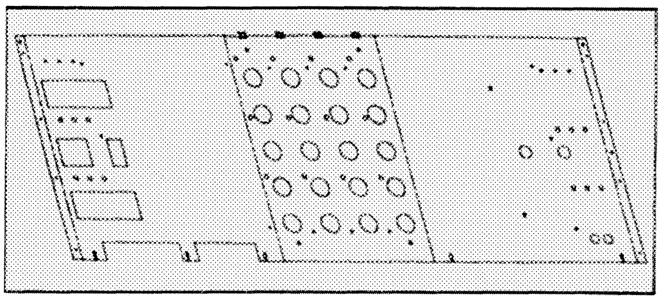

(b) The finished flat pattern can be displayed in an auxiliary view

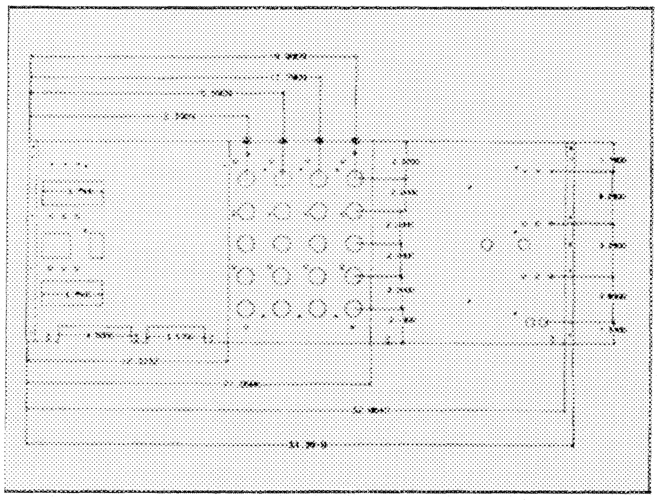

(c) The system automatically dimensions the flat pattern by incorporating the bending data

FIGURE 28.9 CAD Systems Allow the Designer/Drafter to Unfold the Design Automatically

allows the designer to create more parts with the best possible utilization of the sheet metal stock. This is done by repeating a flat pattern on the stock and replicating the punch tool positions. Outlines of any stock size and shape can be graphically represented on the display. This nesting feature minimizes the percentage of excess scrap and reduces material costs. (Chapter 3 covers CAD software used for flat pattern packaging design.)

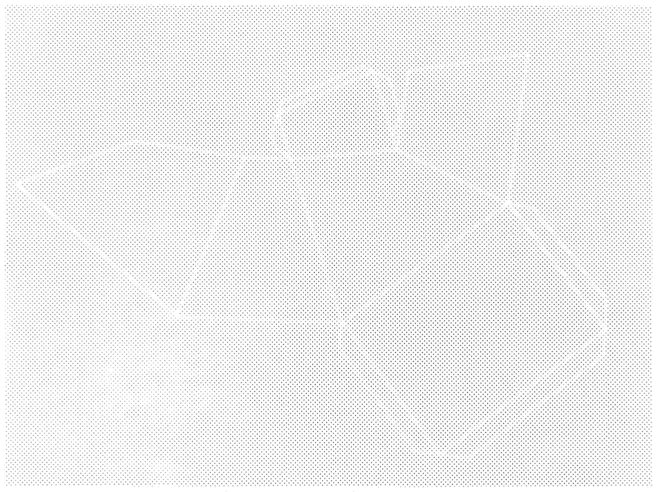

(a) Drawing of cardboard model pattern

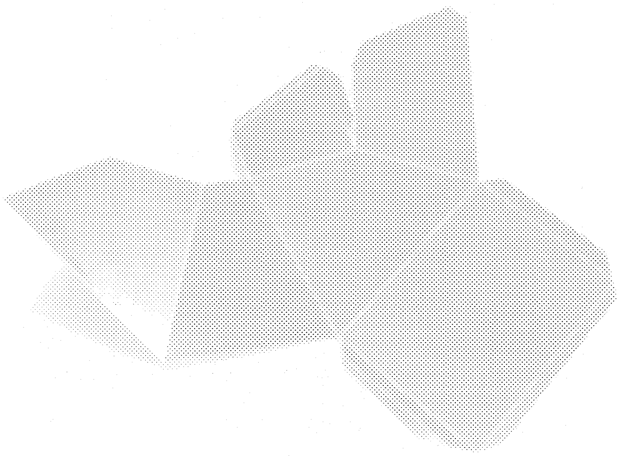

(b) Cutout pattern before gluing part

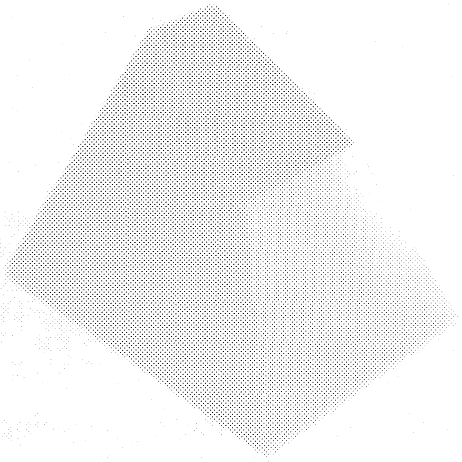

(c) Cardboard model

FIGURE 28.10 Development Model

Focus On . . .

PACKAGING

Most of us don't pay attention to packaging cartons. The cartons merely contain some valuable item and are meant to be thrown away. However, millions of dollars are spent each year to develop new, more attractive, and convenient food containers.

Each carton is designed not only to protect its contents, but to attract the consumer. Fold lines must be symmetrical to produce precise corners, and edge flaps must be cut precisely so the package can be opened and closed. Seals must be applied to keep the product fresh and free from tampering.

Carton design, from cereal boxes to display stand items, requires several sets of drawings. Producing a full-size drawing or template for the manufacturer is the first step. These templates contain cut lines along which the carton is cut or stamped from stock material. Complex curved cuts require a cutting die. Score or fold lines are also on the template. Specification drawings or scale drawings provide precise dimensions, material type, and finish. These drawings must be accurate to $\frac{1}{32}$ in. The manufacturer makes a full-size model of the carton for changes before it goes to production.

Companies such as Procter & Gamble, Pillsbury, and General Mills continually research and develop new ways to package products. Consider the importance of these developments to the packaging industry and how the package was produced the next time you open one of these attractive, disposable food containers. Regardless of how much attention we do or do not pay to packaging, many companies will continue to spend millions convincing us to pick a particular package.

Unfolded cereal box.

28.2.3 Development of Models

Though a pattern is normally drawn full size, a reduced **scale model** may also be made by the designer to check the design. Small-scale, accurate models are constructed for design analysis and to explain design variations to the fabricator or purchaser.

Models can be constructed for any of the problems in this chapter. The pattern is needed before a development and model is constructed [Fig. 28.10(a)]. The pattern is cut out [Fig. 28.10(b)] and the model completed as in Figure 28.10(c). Lightweight cardboard, such as file folder material, works well for making small models. The pattern outline and bend lines are easily transferred onto it, and it folds well, making sharp corners. Note in Figure 28.10(a) that tabs were added along seam edges so as to be able to join the form by gluing or taping. The pattern is transferred onto the cardboard from a carefully executed projection by small pin pricks at controlling points (endpoints of edge/bend lines) or by the use of carbon paper. The pattern is then transferred onto the cardboard and the outline cut. The resulting cardboard pattern is then folded along bend lines and joined along the tabs [Fig. 28.10(c)].

28.2.4 Development of a Truncated Right Prism

The first step in drawing a **parallel-line development** is to find the true length of each edge line and the width of each face plane. A **right section view** shows the perimeter of the object. *The length of the development is equal to the perimeter of the prism as measured in the right section view.* A right section view is always taken perpendicular to the true-length edge lines of a prism or the axis line of a cylinder (end view). The distance between each edge line/element is measured where they appear as points on the right section. The width of each lateral surface is equal to the distance between points on the right section and is transferred directly to the stretch-out line.

In Figure 28.11, the distance between points 1 and 2 in the right section view is transferred to the stretch-out line to establish the width of the first plane face. A **stretch-out line**

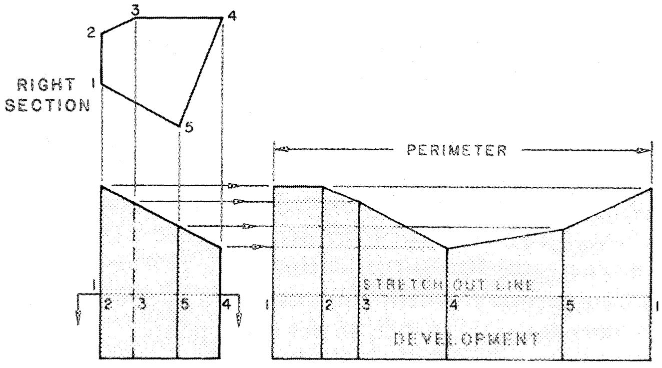

FIGURE 28.11 Development of a Truncated Right Prism

is a construction line along which all perimeter dimensions are laid off. The prism is unfolded clockwise, using the shortest edge as the seam when it is required. In Figure 28.11, edge line 1, not the shortest edge, is the seam line. The stretch-out line is drawn perpendicular to the edge lines as shown. The edge lengths are projected from the frontal view. The outline of the development is then completed by connecting the endpoints of the edge lines. Edge lines in both the front view and the development are true length. Because the development itself is made completely of true-length lines, each lateral surface (plane face) is true shape/size, as is the total development. The length of the development can be checked by measuring the perimeter of the prism (the distance around the right section view). *The development length must equal the perimeter.*

28.2.5 Development of a Prism (Top Face and Lower Base Included)

When one end face of a prism is perpendicular to edge lines, a true-shape end view is a right section. The stretch-out line is projected parallel to the edge view of an end surface, if that surface is perpendicular to the edge lines of the prism. The stretch-out line forms one complete edge of the development outline.

When the lower base and the upper face are required, a view showing these surfaces as true shape must be completed. The true shape of an end surface is established by projecting an auxiliary view perpendicular to the edge view of the base or top face. Each end surface is attached to an appropriate upper or lower border line of the development. A development's stretch-out line can be established at any convenient location on or off the paper. When this procedure is used, distances above and below the stretch-out line are transferred from the true-length view to establish edge line (bend line) lengths on the development. The face widths are, as before, taken from the right section (or true-shape end view).

In Figure 28.12, the development of the prism is required. The bottom surface and the top face are to be included as part of the development. Line 1 is the seam. The following steps were taken to solve the problem.

1. The edge lines of the prism are frontal lines (true length in the frontal view). The prism is laid on its side. Therefore, draw the stretch-out line parallel to the edge view of the top face, as shown. The bottom view is given instead of a top view for this example.
2. Project a true-shape view of the top face (labeled **RIGHT SECTION**).
3. Transfer the face widths from the true-shape/right section view, and set off along the stretch-out line.
4. Project the edge line's endpoints to the development, and connect them to form the outline. The stretch-out line is an edge of the outline on this development.
5. Attach the top face and the bottom base, as shown. The base plane appears as true shape in the bottom view. The upper and lower surfaces can be attached along any related line on the development's outline.

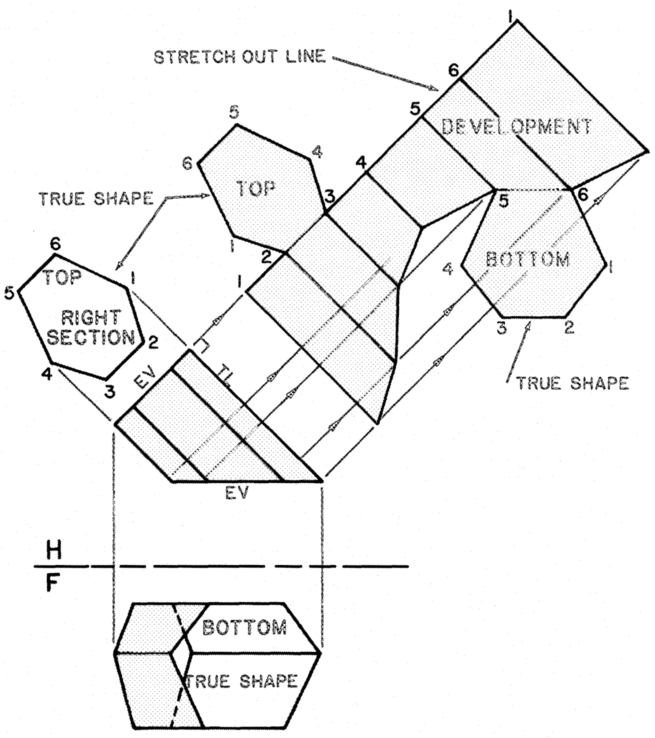

FIGURE 28.12 **Prism Development Including End Surfaces**

28.2.6 Development of a Right Pyramid

Developments of surfaces that are composed of triangular planes, such as pyramids, or that can be divided into small triangular areas, such as cones, are considered **radial-line developments**. Each lateral edge of a pyramid, or element of a cone, *radiates* from the vertex point.

To develop a pyramid, it is necessary to establish the true length of each of its lateral edges and baselines. The development of a pyramid consists of laying out the true shape of each lateral surface in successive order. If the pyramid is a right pyramid, all of its lateral edges will be of equal length and therefore the true length of only one lateral edge is necessary.

In Figure 28.13, the perimeter of the base is true length in the horizontal (top) view. Revolve an edge line until parallel to the frontal plane to obtain its true length in the frontal view. Use this true-length edge line as the **true-length radius**. To start the development, locate vertex point 0 at a convenient location. Swing an arc from point 0 using the true-length radius. Starting with point 1, lay off the true-length distances transferred from the base edges in the horizontal view. Lines 1-2, 2-3, 3-4, and 4-1 are true length in the top view. Connect each point with vertex point 0, and draw straight-line chords between the points to establish the base perimeter on the development.

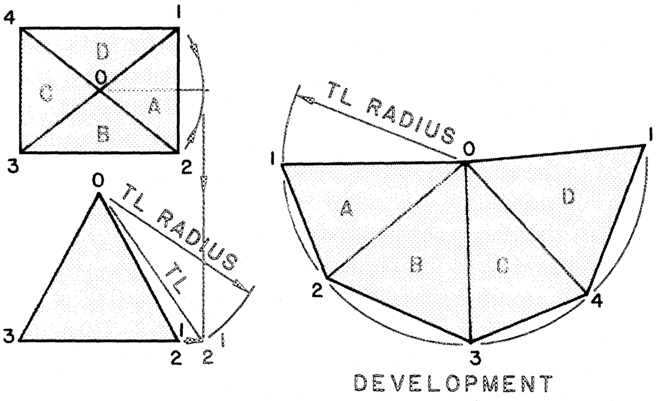

FIGURE 28.13 Development of a Right Pyramid

28.2.7 Development of a Truncated Right Pyramid

Figure 28.14 gives the frontal and horizontal views of a truncated right pyramid. A development, including its upper face (truncated surface), is required. The following steps were used in the solution.

1. Draw the F/A folding line parallel to the edge view of the truncated face, and complete auxiliary view A. The upper/top face is true shape here.
2. Establish the true length of edge line 0-1 by revolution. The true length of 0-1 is equal to all other edge lines and is used as the TL radius.
3. Solve for the true length of the distances from vertex point 0 to where each edge line has been cut. Points 1^1, 2^1, 3^1, 4^1, etc., represent the points at which the lateral edge lines have been cut. True-length distances 0-1^1, 0-2^1, 0-3^1, etc., are used to establish the upper outline of the development.
4. Locate vertex point 0 at a convenient location. Swing the TL radius (radius 0-1) an indefinite length.
5. Line 1-1^1 is the shortest edge; therefore, it is used as the seam. Draw line 0-1 on the development and step off the baseline distances along the arc. Distances 1-2, 2-3, 3-4, 4-5, 5-6, 6-7, 7-8, and 8-1 (taken from the horizontal view) are laid off along the arc. All base lengths are equal since the base plane is an octagon; therefore, distance 1-2 is used for the chord lengths.
6. Connect the base points to vertex point 0. Draw these lines as construction lines only. The actual bend lines include the distance from the base points to the cut points.
7. Connect the base points in sequence as straight-line chords to establish the lower outline of the development.
8. Transfer distance 0-1^1 to line 0-1 on the development. Repeat this procedure to locate the cut points on the development. Connect points 1^1, 2^1, 3^1, 4^1, etc., to form the development's upper outline.
9. Attach the true shape of the top surface to the development if along a common line.

28.2.8 Development of an Oblique Pyramid

The development of an oblique pyramid is similar to that of a right pyramid, except that the lateral edges of an oblique pyramid are unequal. Hence, a radius cannot be used to

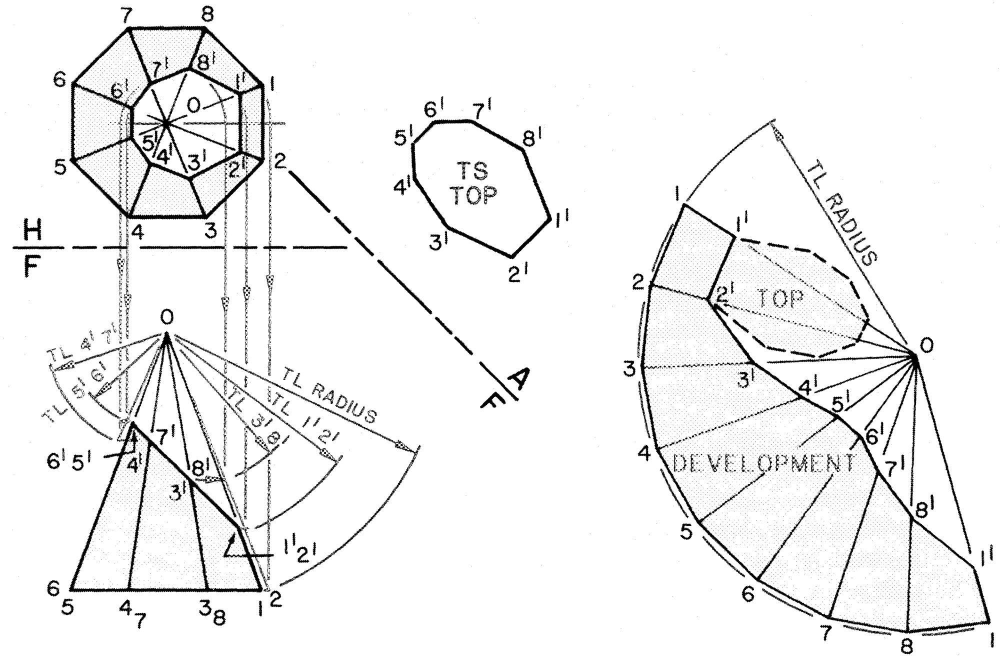

FIGURE 28.14 Development of a Truncated Pyramid

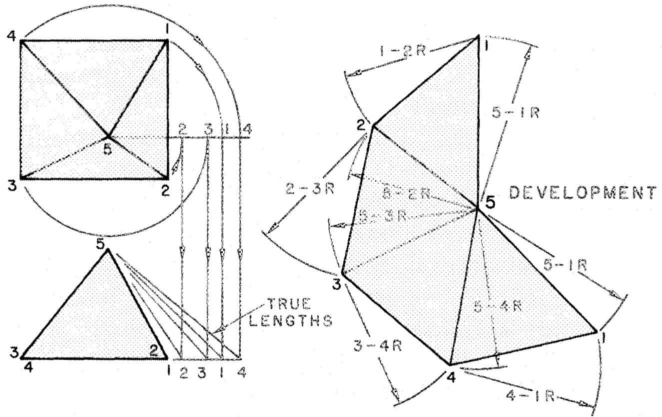

FIGURE 28.15 Development of an Oblique Pyramid

speed the development process. The true length of each lateral edge must be determined separately. Two methods are in common use: the *true-length diagram* and the *revolution method*. In this section the revolution method has been employed.

The base plane normally appears as an edge in the frontal view and parallel to the horizontal plane. When this is the case, the true shape of the base plane shows in the horizontal view. A true-shape view provides the true length of the base's perimeter. The development is constructed by drawing each triangular lateral surface as true shape with common edges joined. In Figure 28.15, the development of the oblique prism is required. The following steps were taken to solve the problem.

1. Revolve each lateral edge line about vertex point 5 in the horizontal view, and show in the frontal view as true-length measurements. On the development, each of these lines serves as a true-length radius.
2. Start the development by swinging radius 5-1R to establish line 5-1. From point 5, swing arc 5-2R. From point 1, swing arc 1-2R (this is the true length of baseline 1-2, taken from the horizontal view) until it intersects arc 5-2R at point 2. The lateral surface bounded by points 5, 1, and 2 is true shape, with its inside up.
3. From vertex point 5, swing arc 5-3R. Using the true length of baseline 2-3 as radius 2-3R, swing an arc until it intersects arc 5-3R at point 3. Lateral surface 5-2-3 is true shape. Line 5-2 is a bend line.
4. Repeat step 3 to lay out the remaining two surfaces.

28.2.9 Development of a Truncated Oblique Pyramid

A truncated oblique pyramid is easily developed when the vertex point can be established on the drawing. The true lengths of the edge lines from the vertex point to the base points must be determined first. In Figure 28.16, the frontal and horizontal views of the oblique prism are given. The following steps were used to develop the part.

1. Extend the lateral edge lines to establish vertex point 0.
2. Revolve each extended lateral edge line in the horizontal view, and show as true length in the frontal view.
3. Establish the true lengths of the bend lines (cut edges) by projecting each cut point in the frontal view, perpendicular to the axis line, until it intersects its related true-length revolution.
4. Start the development by drawing edge line 0-1. Using baseline 1-2 as the radius, swing arc 1-2 from point 1. Swing an arc from vertex point 0 using line 0-2 as the radius, until it intersects arc 1-2 at point 2. Triangular plane 0-1-2 is one panel/face of the development. Complete the remaining triangular faces.
5. Complete the layout by establishing the cut edges to form the upper edge of the development.

You May Complete Exercises 28.1 Through 28.4 at This Time

28.3 CURVED SURFACES

In the preceding sections the developments of geometric forms were straight lines and plane surfaces. The development of forms whose surfaces are curved is also an impor-

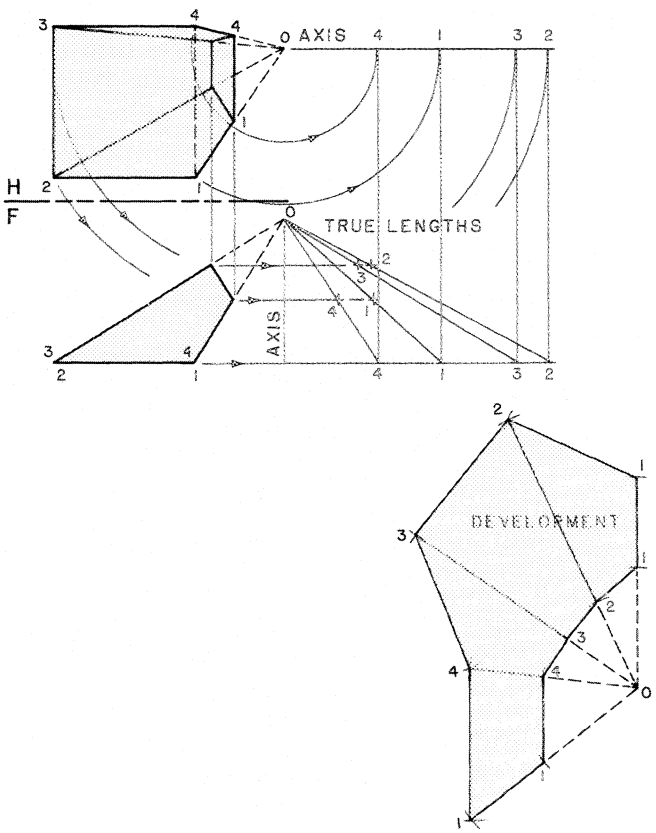

FIGURE 28.16 Development of a Truncated Oblique Pyramid

tant part of engineering design work. **Curved surfaces** fall into two basic categories: single-curved and double-curved.

A **single-curved surface** is a **ruled surface**, since it can be generated by the movement of a straight line. Cylinders, cones, and convolutes are the three types of single-curved surfaces. In Figure 28.4, the base support of the water tower is cylindrical. Single-curved surfaces are the most common and can be accurately developed.

A **double-curved surface** is generated by the movement of a curved line. The sphere, spheroid, torus, paraboloid, and hyperboloid are examples of double-curved surfaces. Double-curved surfaces can be developed only approximately. The water tank in Figure 28.4 is an example of a double-curved surface.

All curved surfaces are generated by the movement of a curved or a straight line. The line that generates a surface is called a **generatrix**. Any one position of the generatrix is an **element** of the surface. The generatrix moves according to the **directrix,** which is a line (or lines) that defines the direction and motion of the generatrix.

28.3.1 Development of Single-Curved Surfaces

Cylinders, cones, and convolutes are the three types of **single-curved surfaces**. A single-curved surface is generated by the movement of a straight line so that each of its two closest positions is in the same plane. Any two consecutive positions (elements) are parallel (as in a cylinder) or intersect (as in a cone or a convolute).

A **cylinder** is generated by a straight-line generatrix moving around a curved directrix. The directrix is normally a closed curve (ellipse, circle, etc.). All positions of the generatrix (elements) are parallel to one another. A cylinder develops as a parallel-line development.

A **cone** is generated by the movement of one end of a straight-line element (generatrix) around a curved directrix (normally closed). The other end of the generatrix is fixed at one point: the vertex/apex. The positions of the generatrix establish elements on the surface of the cone. A development of a cone is a *radial-line development,* since each of its elements radiates from the vertex point.

A **convolute** is generated by a straight-line generatrix, which moves in accordance and tangent to a double-curved line (directrix). Two (*never* three) consecutive elements intersect. Aircraft wings and fuselages, piping and ducting transition pieces, and automobile bodies are a few examples of the use of convolutes in industry.

28.3.2 Development of a Right Circular Cylinder

A cylinder is developed by unrolling its surface, normally inside up. A right circular cylinder has a stretch-out line equal to its circumference: diameter × 3.141 (π), as in Figure 28.17. A right section (axis as a point) and a view showing the axis as true length are necessary to develop a cylinder. The edge view/right section determines the shape of the cylinder and provides a view in which elements can be established on its surface. A true-length view of the cylinder's axis shows all elements on its surface as true length. A development is made by rolling the lateral surface of the cylinder onto a plane

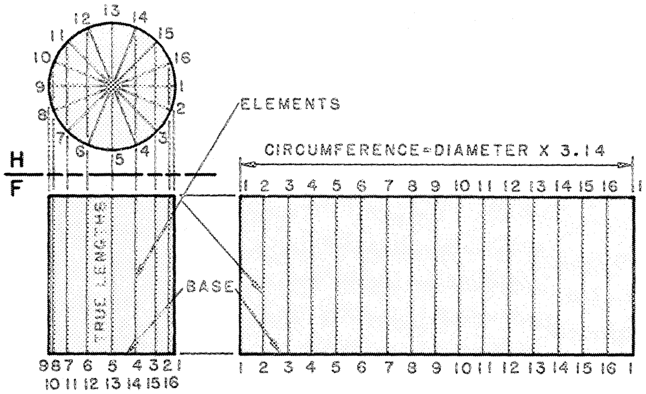

FIGURE 28.17 Development of a Right Cylinder

In Figure 28.17, the right section of the cylinder is shown in the horizontal view. Elements are established along its surface by dividing the right section view into a number of equal parts. The elements are located by evenly dividing the circumference of the circular section as shown; twelve, sixteen, or twenty-four radial divisions are common. Each division is projected to the true-length view (frontal view) to establish the elements on the lateral surface. The stretch-out line is drawn perpendicular to the true-length view. The base perimeter may be used as the stretch-out line if it is perpendicular to the cylinder's axis, as in the example. The stretch-out line is divided into the same number of equally spaced parts as the right section and labeled accordingly. The true length of each element is projected to the development, from the true-length view, to establish its outline. In Figure 28.17, both bases are perpendicular to the axis and so all elements are the same length and the development unrolls as a rectangle, with its height equaling the altitude of the cylinder and its length equal to the circumference. Cylinders are a single surface; therefore, the elements are drawn as thin construction lines in all views and on the development.

28.3.3 Development of Intersecting Cylinders

Figure 28.18 shows the development of two cylinders intersecting with a 90° **miter bend.** The following steps were taken to solve the problem.

1. Draw a half circle and divide into equal parts. The half section corresponds to the end view (right section) of the cylinder. Label the intersection of the division lines from 1 to 7.

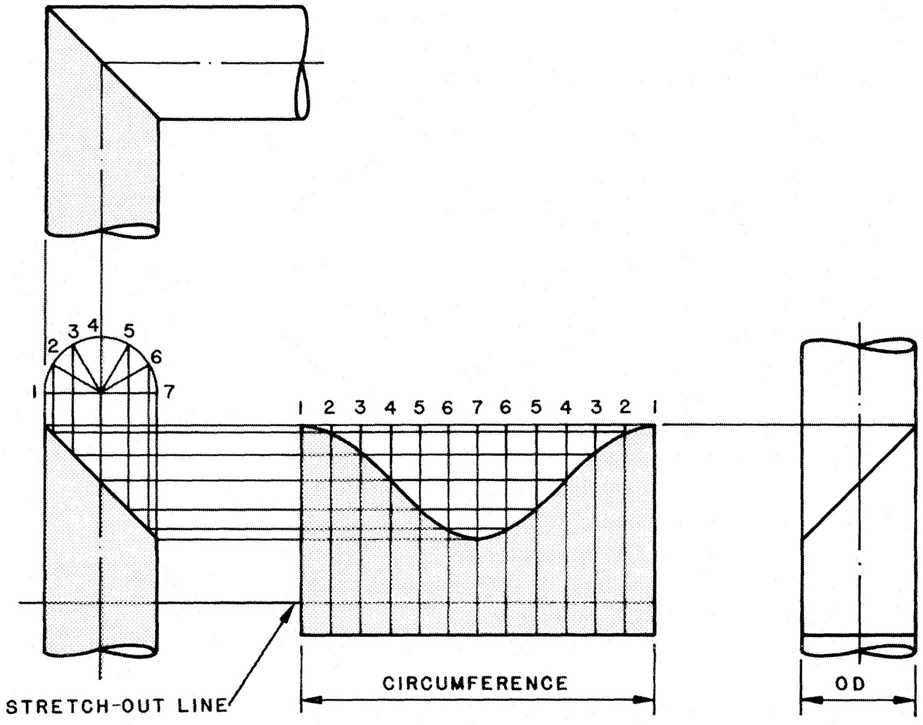

FIGURE 28.18 Development of a 90° Elbow

2. Project points 1 through 7 to the front view, where they intersect the miter line.
3. Extend a stretch-out line perpendicular to the front view of the pipe (axis line), and lay off the length of the development using the calculated circumference (or set off the chord distances, 1-2, 2-3, etc.).
4. Divide the circumference into equal parts (twelve here) along the stretch-out line, and label.
5. Project the height dimension of each element from the front view to the development.
6. Connect points on the development with a smooth curve.
7. The development can now be transferred to a pattern and cut out to serve as a wrap-around template on a pipe or cylinder.

In Figure 28.19 two cylinders of different diameters are intersecting at 90° to form a tee. The following steps were taken to solve the problem.

1. Draw the front and side views of the intersecting pipes (excluding the line of intersection).

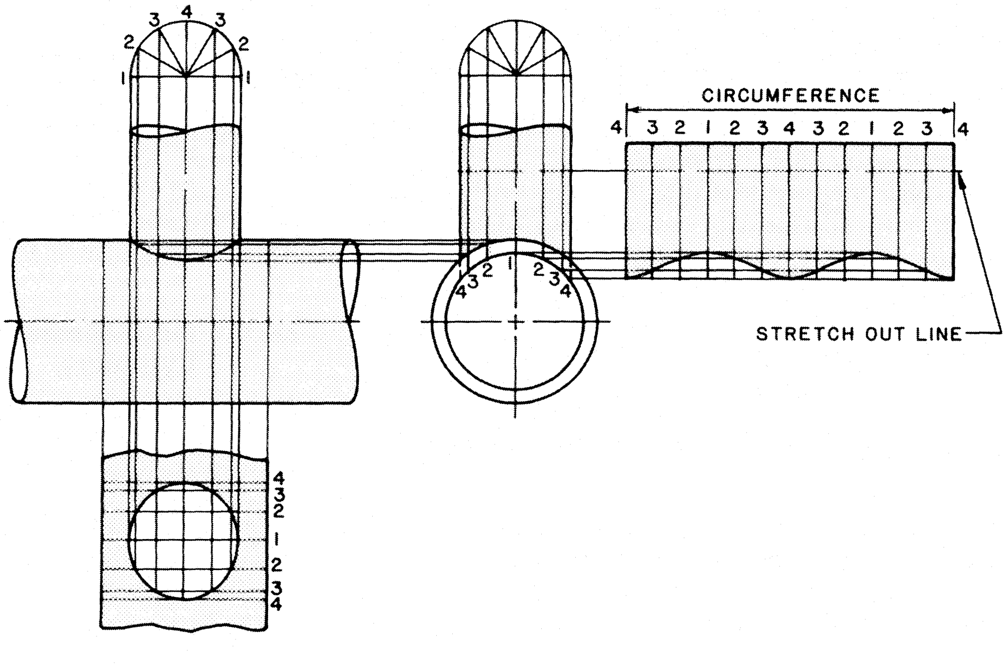

FIGURE 28.19 Development of a 90° Tee with Pipes of Differing Diameters

2. Draw half circles (above each view) corresponding to the branch pipe circumference, and divide it into equal parts.
3. Project the points into the views as shown. Where the points intersect the header (main larger pipe) in the side view, label the intersection points as shown and project to the front view.
4. Project the numbered points from the half circle to the front view. Where they intersect corresponding points extended from the side view, points along the line of intersection are established. If the pipes are the same diameter, the lowest point is established by calculating the distance from the head centerline (2 × pipe wall thickness of the branch pipe). This method is used because the branch will fit inside the hole cut from the header.
5. Calculate the circumference of each pipe, and lay off the length of the developments. Divide the circumferences into twelve equal parts, and establish the element lengths by projecting the points from the front view.

Figure 28.20 describes how to establish a development for two pipes intersecting at something other than 90°. Here the pipes intersect at 45°. The following steps were used in the solution.

1. After drawing the front and side views, construct half-circle end sections and divide into equal parts.
2. Project the end-section divisions (points) to the front view to establish the line of intersection.
3. Draw the stretch-out lines perpendicular to the pipes, and calculate their respective circumferences.

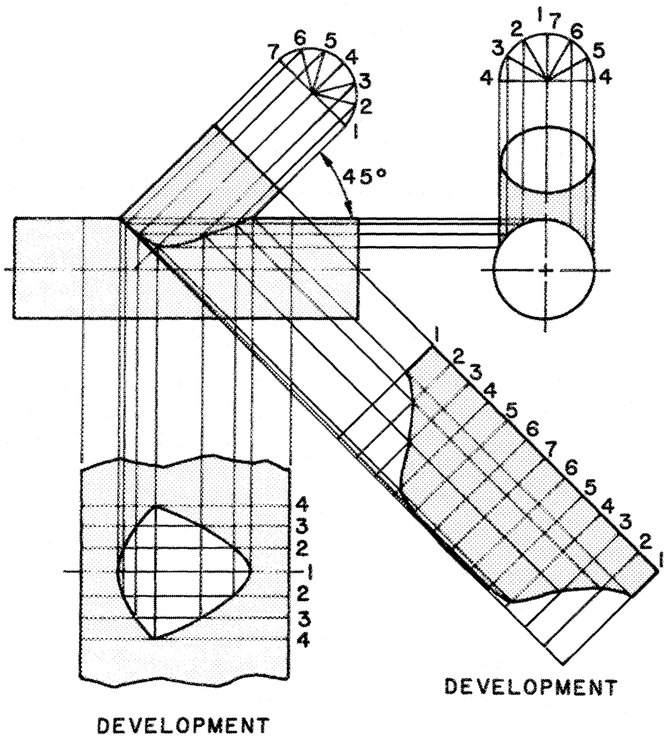

FIGURE 28.20 Pipe Lateral Pattern

4. Divide the circumference length into twelve equal parts, project the related points to the development.
5. Connect the points with a smooth curve.

You May Complete Exercises 28.5 Through 28.8 at This Time

28.3.4 Development of Cones

Cones are found in the design of a variety of industrial products, airplane configurations, storage tanks, ducting and piping transitions, and numerous structural, architectural, and mechanical designs. A **cone** is a single-curved surface generated by the movement of a straight-line generatrix, fixed at one end and intersecting a curved directrix. The fixed point is the vertex, and the directrix is normally a closed curve (usually a circle or ellipse). Each position of the generatrix establishes an element on the surface of the cone. Because all elements of a cone terminate at the vertex point, the development of a cone is a radial-line development. The generatrix of a cone is a straight line.

There are three general types of cones: right circular, oblique, and open. A **right circular cone** is a cone of revolution generated by revolving the generatrix about an axis line with a circle as a directrix and an axis perpendicular to the base plane (directrix plane). An **oblique cone** has an axis that is not perpendicular to its base plane; its directrix is a closed curve. An **open cone** has an open single-curved or double-curved line as a directrix.

28.3.5 Development of a Right Circular Cone

A right circular cone develops as a sector of a circle whose radius equals the **slant height** of the cone and with an arc length equal to the circumference of the cone. The development of a right circular cone involves one of two methods. The *graphical* method involves dividing the base circle of the cone into equal parts. In Figure 28.21 the base circle is radially divided into sixteen equal parts. An element on the cone's surface is drawn at each division. All elements are of

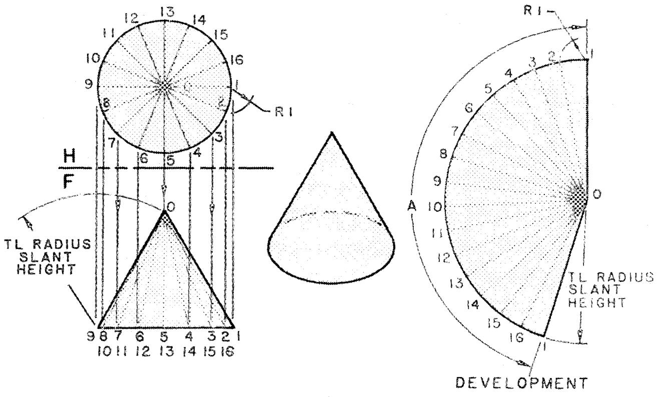

FIGURE 28.21 Development of a Right Circular Cone

the same length. The true length of an element equals the slant height of the cone. For the development, the slant height is used as the TL radius, which is swung an indefinite length. Distances between the base divisions (chord measurements) are stepped off along the development arc, R1. This method produces a development pattern with an arc length (A) slightly smaller than a true development since the chord distance between base divisions is smaller than the arc distance.

When an accurate development of a right circular cone is required, the arc angle (*A*) can be calculated. Angle *A* is the sector angle of the development. The sector angle (angle *A*) equals the radius of the cone's base divided by the slant height, multiplied by 360° [Angle *A* = (radius of base/slant height) × 360°]. The development is drawn using the computed sector angle to establish the length of the arc of the development.

28.3.6 Development of a Truncated Right Circular Cone

The development of a truncated right circular cone can be established by drawing the sector as in Figure 28.21. The upper outline of the development, corresponding to the truncated surface, is determined by the same general method as for a truncated right pyramid. A right circular cone will have equal elements (Fig. 28.22).

In Figure 28.22, a development of the truncated right circular cone is required. The following steps were taken to solve the problem.

1. Divide the cone's circular base into twelve evenly spaced parts to establish the surface elements and project to the frontal view.
2. Label the elements and the cut points along the elements.
3. All elements are true length; therefore, the cut points (A through G) may be moved perpendicular to the axis until they intersect element 1 or 7 (both of which appear true length in the frontal view). This procedure is simply the revolution of each cut point in the horizontal view and its true-length projection in the frontal view.
4. Using element 0-1 as the slant height, swing an arc from vertex 0 to start the development. Establish the sector of the development by the graphical method, stepping off the cone's base chord distances on the sector's arc, 1-2, 2-3, 3-4, etc.
5. Transfer the true lengths of the upper portions of the elements to their related elements on the development, and connect the cut points to form the upper outline. 0-A is transferred to element 0-1. 0-B is transferred to elements 0-2 and 0-12. 0-C is transferred to elements 0-3 and 0-11.

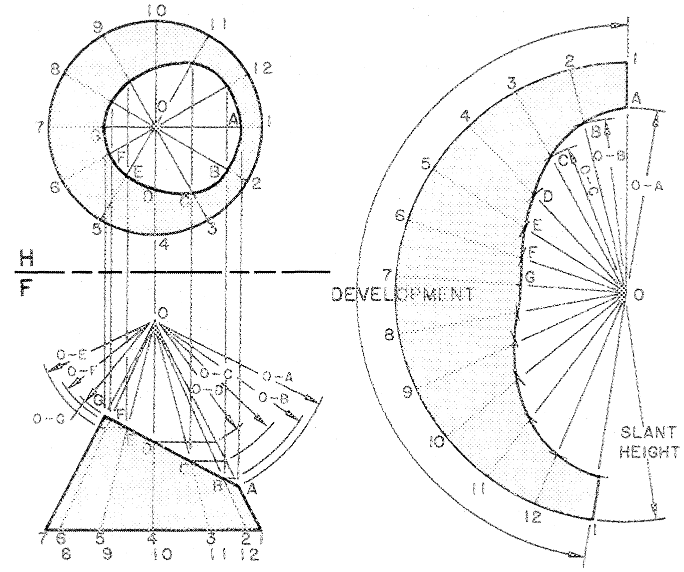

FIGURE 28.22 Development of a Truncated Cone

28.3.7 Development of an Oblique Cone

The development of an oblique cone is similar to the development of an oblique pyramid. Elements are established on the cone's surface by evenly dividing the base curve (Fig. 28.23). Since the cone is oblique, the elements are of different lengths and the development is not a sector of a circle. Two adjacent elements and their corresponding **chordal distances** define a series of triangular planes on the cone's surface. The development of the cone involves laying out each successive triangle with common edges joined. The true length of each element is determined before the development is started. Revolution establishes the true length of the elements

In Figure 28.23, a development of the oblique cone is required. The following steps were used in the solution.

1. Divide the cone's base in the horizontal view into twelve equal parts. Draw elements from vertex 0 to each point on the base. Show the frontal and horizontal views of the elements.

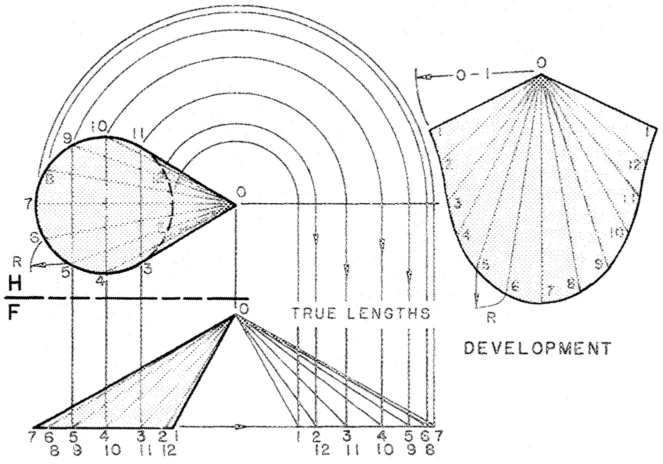

FIGURE 28.23 Development of an Oblique Cone

2. Determine the true length of each element.
3. Use the shortest element as the seam, and draw the development inside up. Start the development by drawing element 0-1.
4. From point 1 on the development, swing an arc (1-2) equal to the chordal distance R. All chords equal R
5. Using the true length of element 0-2, swing an arc from vertex 0 until it intersects arc 1-2 (R) and locates point 2. Triangular plane 1-0-2 is the first of twelve successive planes representing the unrolled surface of the cone. Continue laying out the triangular planes. Connect the endpoints of the elements with a smooth curve to complete the outline of the development.

28.3.8 True-Length Diagrams

To develop a surface composed of numerous edges, a **true-length diagram** (TL) is drawn. Since the true length of each edge is necessary, the revolution method may not be adequate. The revolution method takes more room and requires that the given views be used to revolve the lines. A true-length diagram, however, can be constructed anywhere, on or off the paper. One or more TL diagrams can be employed as required for clarity if the edge lengths are very similar in length or too numerous.

The TL diagram establishes the true length of each edge surface element by creating a right triangle. The height dimension is drawn representing a vertical line dropped from the vertex point to the base plane. The base dimension is measured in the top view (H) as a straight-line distance from the vertex (0) to one of the points on the curve's edge (0-8, 0-9, 0-10, etc.). The **hypotenuse** equals the true length of a corresponding edge line on the TL diagram, and is used to lay out the development (0-1, 0-2, etc.) (Fig. 28.24).

28.3.9 Development of a Conical Offset

A **conical offset** sometimes serves as a transition between two circular pipes of different diameters on different axes. This type of **transition piece** is actually a frustum of an oblique cone. In order for the offset piece to be a frustum, the upper and lower base planes must be parallel. Therefore, the two given pipes are intersected by parallel planes, as shown in Figure 28.24.

Figure 28.24 gives the frontal and horizontal views of the conical offset. Since the offset is symmetrical, only a half development needs to be drawn. The vertex is located by extending the edge lines of the offset until they intersect at vertex 0. Elements are established on the surface of the offset, where it appears as a circle. The elements are drawn from the vertex through each division. The elements are then projected to the frontal view. A true-length diagram is constructed in order to establish the true lengths and the frustum (all points) of each element. Since the lower base of the offset is at an angle to the horizontal plane, the base end of the elements on the true-length diagram will be at different elevations. The height dimensions can be projected from the frontal view.

The true-length chordal distance between divisions on the offset's base cannot be determined in the given views. The lower base is revolved in the frontal view until parallel to the horizontal plane. A true-shape view of the offset base is projected as shown. The true chordal distances, as represented by R, can now be used to lay out the approximate base outline of the development.

Start the development by locating the vertex point and drawing the shortest element 0-1, as shown. The lower leg of each thin triangular plane (representing the surface to be developed) is equal to the base divisions, e.g., 1-2, 2-3, 3-4, etc. Lay out the development using the true lengths from the TL diagram and the base divisions.

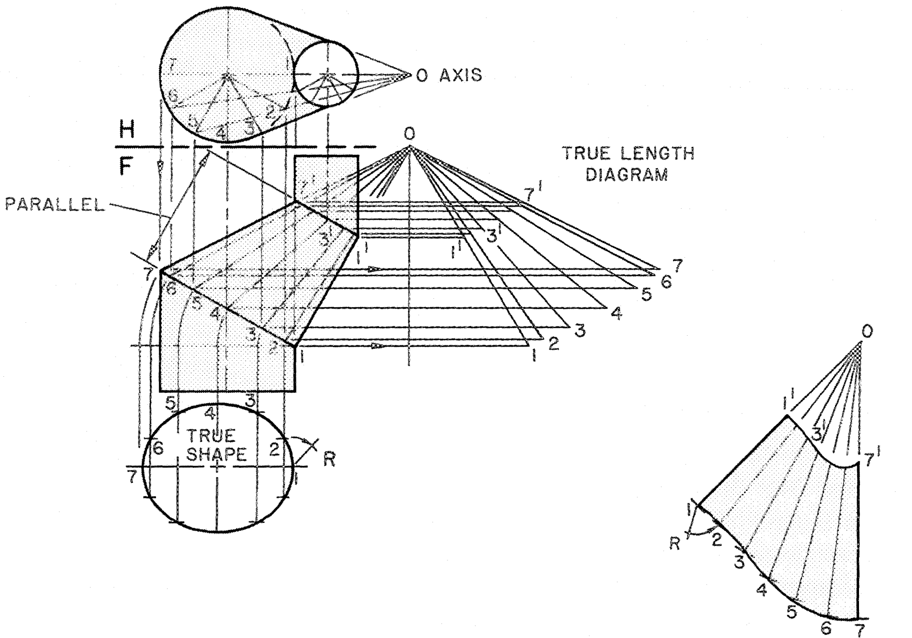

FIGURE 28.24 Development of a Conical Offset

28.4 TRANSITION PIECES

A general definition of a **transition piece** would include all shapes that connect two or more forms of different size. This broad definition would thus include types of developments already covered under cones and pyramids.

Transition pieces are developed by **triangulation**—that is, by dividing the surface of the piece into triangles. Triangulation has already been used to develop a variety of shapes in preceding sections. Elements are drawn on the surface of the form to bedeveloped and connected by diagonals if adjacent elements do not intersect. The development is laid out as a series of joined triangular areas.

Because a transition piece joins two or more geometric forms, each opening of the transition piece will be a different configuration. In general, transition pieces are designed to be formed from sheet metal or other materials and connected along a common seam. Transition pieces join a variety of materials and objects. Pipe shapes and HVAC ducting utilize transition pieces throughout their design. Hoppers, warped funnels, and vessel bottoms of all types have transition pieces integrated into their design. The conical, convolute, or warped surface configuration of an aircraft's forward section is a transition piece between the nose and the fuselage.

In Figure 28.25, eleven possible variations of transition pieces are provided. The possibilities of shapes and sizes are limited only by the designer's imagination and the financial and production feasibilities. Types (a) and (b) are both a symmetrical square-to-round transition, one of the more common variations. Type (c), a rectangle-to-round transition, is developed by the same general method as (a) and (b). Type (d), a square-to-rectangle transition, is composed of plane surfaces and can therefore be accurately developed. Note, this type is really a frustum of a right pyramid. Its given surfaces are developed by triangulation if the vertex is unavailable. The next three examples all involve the connecting of two or more circular or elliptical shapes: Type (e) is a conical offset connecting two separate pipes of differing diameters and axes; type (f) is a WYE fitting, connecting two round pipes to one pipe of a larger diameter; and type (g) is a three-stream transition into a single large-diameter pipe. The remainder are specialized variations of transition pieces: type (h), round to oblong; type (i), two square ducts to one round; type (j), square-to-round transition at an angle; and type (k), a hopper type.

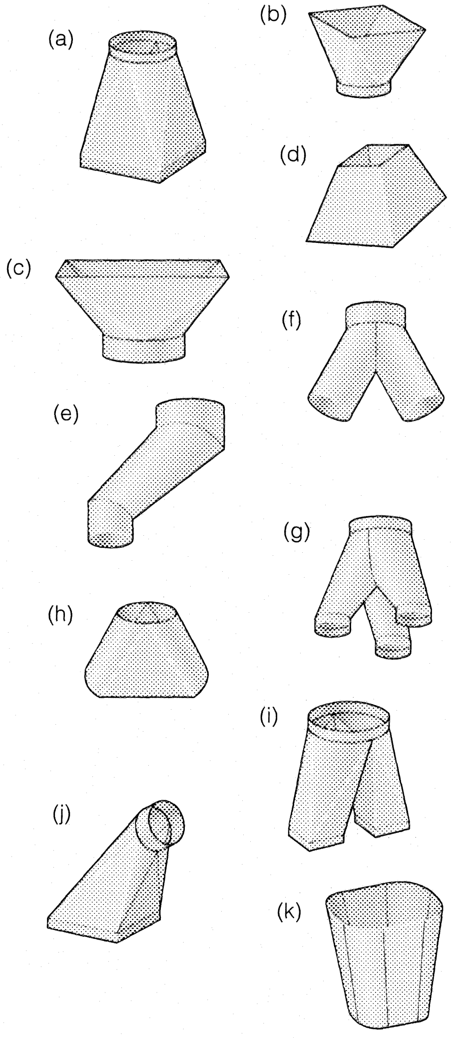

FIGURE 28.25 Examples of Transition Pieces

28.4.1 Triangulation

In Figure 28.26, the transition piece is developed by **triangulation**. The sheet metal hopper is an example of an industrial application of such a transition piece. The square-to-square form developed in Figure 28.26 has similarly shaped openings, and its edges can be extended to locate a vertex. Normally, when such a piece is to be developed, methods are used that utilize the vertex, and the development is constructed as a frustum of a pyramid. This form is here only to provide a simple illustration of the triangulation of a surface. Because all surfaces of the object are identical, only one surface need be divided into a triangular area. A diagonal, 4-5, is drawn so as to divide one of the equal trapezoidal shapes into two triangular planes. The true lengths of the hopper's edges and diagonals are established

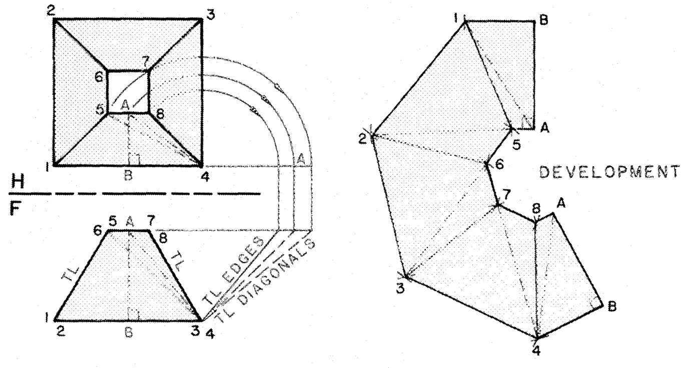

FIGURE 28.26 Triangulation

by revolution. The true lengths of the upper and lower openings appear in the horizontal view and can be transferred directly to the development.

To establish the shortest seam, divide the front surface in half. Line A-B will become the seam edge. This placement of the seam makes the joining method easier, quicker, and along the shortest line. This area must also be divided into triangles: Draw a diagonal from point A to point 4 and establish its true length by revolution.

Start the development by drawing line A-B longer than required. Using the true lengths of the edges, diagonals, and upper and lower opening edge lines as arc lengths, complete the development. Triangle A-B-4 is a right triangle. Swing arcs B-4 and 4-A to locate point A. Arcs A-8 and 4-8 intersect at point 8.

28.4.2 Development of a Transition Piece: Circular to Rectangular

A transition piece connecting a circular to a rectangular geometric form is developed by dividing its surface as in Figure 28.27. The surface of the transition piece is composed of four isosceles triangles and four conical surfaces. The bases of the isosceles triangles form the lower base of the transition piece. The four conical surfaces are portions of an oblique cone.

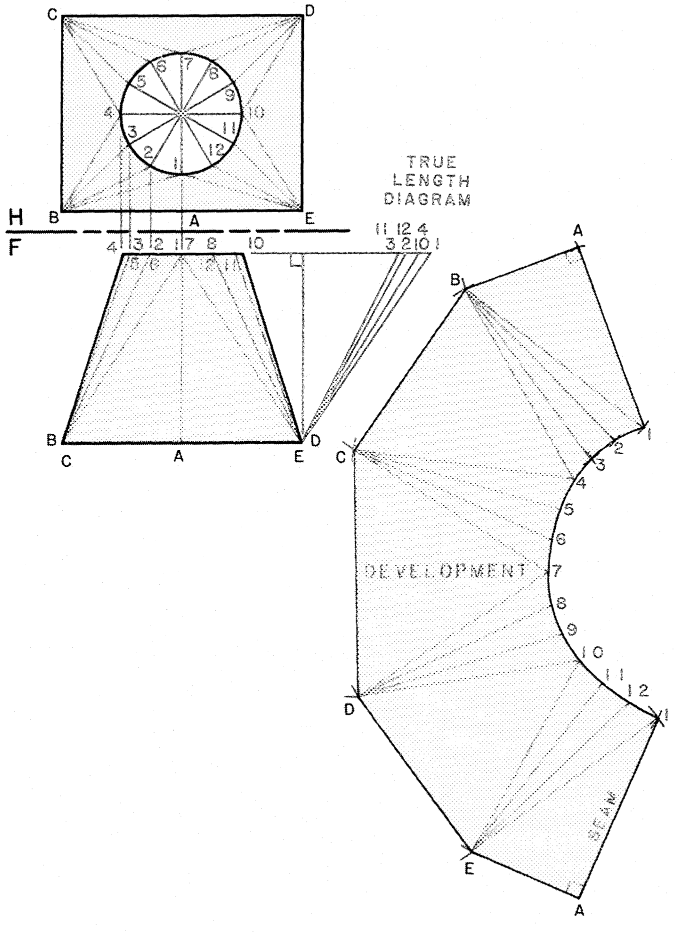

FIGURE 28.27 **Transition Piece Development: Circular to Rectangular**

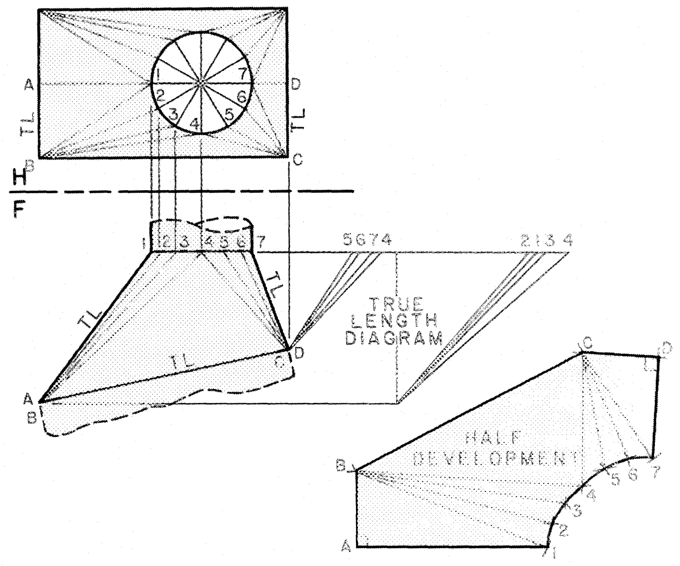

FIGURE 28.28 **Transition Piece Development**

The first step in the development of a circular-to-rectangular transition is to divide the conical surfaces into triangular areas. In Figure 28.27, the circumference of the circular base is divided into twelve equal parts. Points 1, 4, 7, and 10 already exist as divisions, since they correspond to the vertex points of the isosceles triangular areas of the piece's surface. All other points divide the conical surfaces into three separate areas. Since the transition piece is symmetrical, all of the four conical surfaces and their triangular divisions are identical, and so the true lengths of only one set of elements need be established.

A true-length diagram is constructed as shown to establish the true lengths of the four elements. The true lengths of the lower rectangular base can be found in the horizontal view, as can the chord distances between divisions on the upper circular base. The seam line is established by dividing the frontal triangular surface in half. Line 1-A will become the seam line.

Start the development by laying out triangle A-B-1. Draw line A-1 longer than the final length. Construct the triangle by drawing line A-B perpendicular to construction line A-1. Length A-B can be taken directly from the top view of the part, since the baseline is true length there. A-B is one-half of baseline B-E. Lengths B-1 and E-1 are the same; therefore, use the TL diagram to establish the true length, and swing an arc (radius B-1) from B on the development to where it crosses construction line A-1 at point 1. Use the true lengths of the elements, the chord distances, and the lower base lengths as arc lengths. Triangle 1-B-2 is laid out next. Each successive triangle is constructed so that the transition piece is unrolled clockwise, inside up.

The rectangular-to-circular transition piece shown in Figure 28.28 has an angled base edge. This figure is

Applying Parametric Design . . .

SHEET METAL DESIGN AND PACKAGING

Developments can be created via a program called **Pro/SHEETMETAL**. The design can be created as a flat pattern and then bent into the required shape, or it can be created in the required design shape and unfolded into a flat pattern (Fig. A). The flat pattern can then be nested in a workpiece for manufacturing (Fig. B).

Pro/SHEETMETAL is an optional module for Pro/ENGINEER for designing a sheet metal part. A variety of capabilities are provided with this software, including the following:

- Designing the sheet metal parts by defining the volume and support for the components of an assembly
- Adding sheet metal features such as walls, bends, cuts, punches, notches, and forms to the part in an unbent or bent condition (Fig. C)
- Creating bend tables that provide the developed length of material for bends of different radii and material thicknesses
- Creating the flat pattern of the part
- Creating a bend order table that specifies the order, bend radius, and bend angle needed for manufacturing
- Creating a drawing that contains the "flat pattern" and "as designed" sheet metal part, and the bend order table for manufacturing

FIGURE A **Sheet Metal Part in Its Designed Condition and As an Unfolded Flat Pattern**

A sheet metal part can be created in Sheet Metal mode or in Assembly mode as a sheet metal component, or it can be a constant-thickness regular part that is converted to a sheet metal part.

Typical sheet metal structures that will be designed with Pro/SHEETMETAL are cabinets and supporting structures for electrical and mechanical equipment (Figs. D and E). In these instances, you will want to design the cabinet and support structures around the internal components. As with regular parts created in Assembly mode, a sheet metal part can be dimensioned to the component parts that it is supporting. A possible design approach to follow for creating sheet metal part is as follows:

1. Create the basic sheet metal parts in Sheet Metal mode.

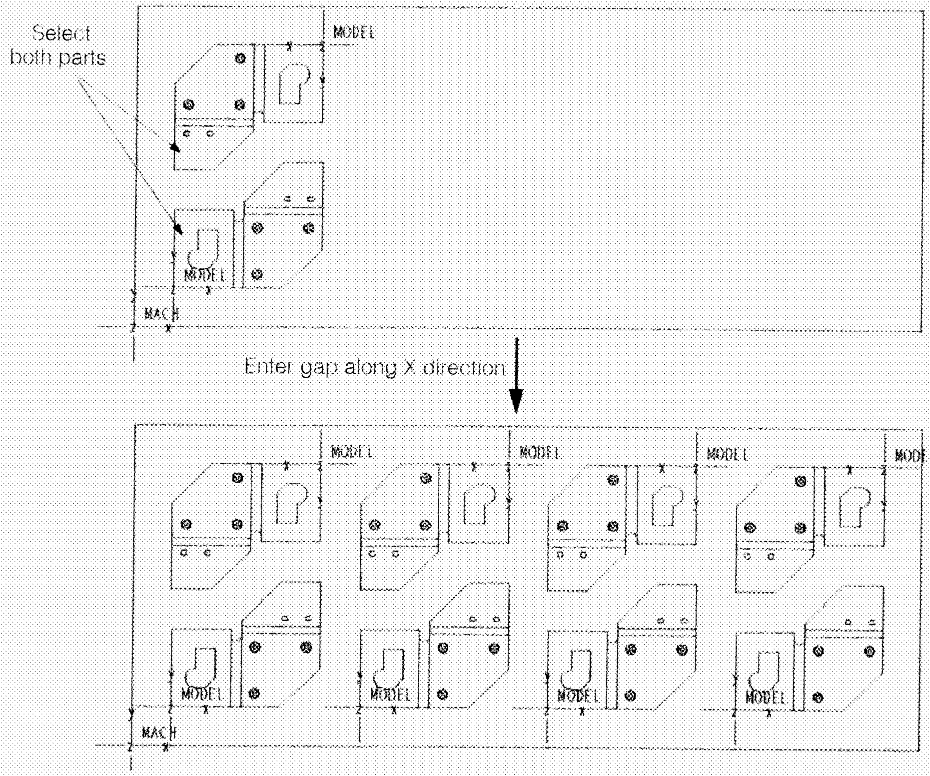

FIGURE B **Nesting a Flat Pattern for Manufacturing**

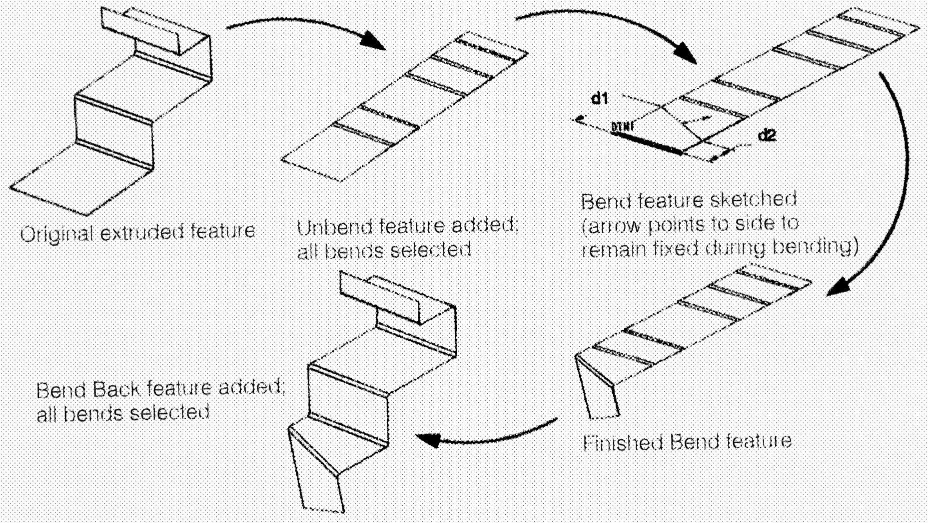

FIGURE C **Adding Unbends and Bends to an Extruded Feature**

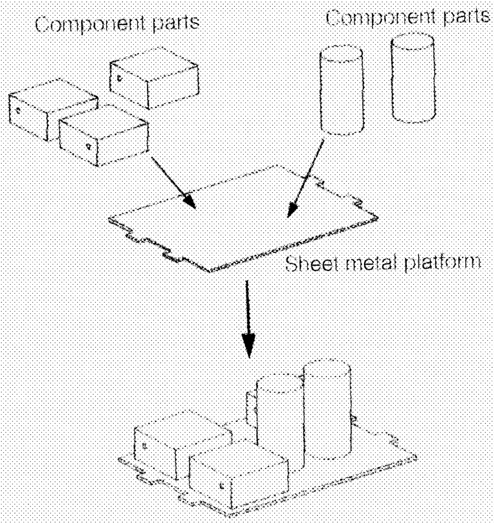

FIGURE D **Designing Around Component Parts**

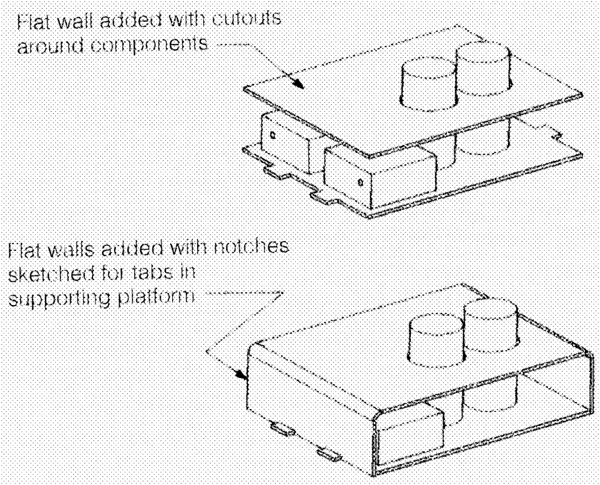

FIGURE E **Packaging Design**

Since many of the components will be held in place with screws or bent tabs, you might want to leave the creation of these features for later, when the components are assembled.

2. Create the assembly by assembling all major internal components relative to each other. Include simple supporting structures, or sheet metal parts that are not completely defined at this time, to place the components. Less important components can also wait.
3. Create or modify the sheet metal parts in Assembly mode using the internal components as references. This will aid you in adding supporting walls, form features for stiffening panels, and punches and notches for fastening the components.
4. After the cabinet and supporting structures are defined relative to the internal components and each other, add any remaining components, sheet metal, or assembly features.
5. Create and/or select a bending table to provide material allowances when unbending the part.
6. In Sheet Metal mode, create a bend order table to define the bending sequences for each part.
7. Add a **Flat Pattern** feature. This will create your flat pattern for drawing and manufacturing.
8. Create a family table for each sheet metal part, including at least two instances: the unbent flat pattern instance, and the "as designed" instance. The bend table data will ensure accurate flat pattern geometry of the unbent part.
9. Document the part by creating drawings; you can include both instances (multimodel drawing). Show the dimensions for the "as designed" part, and show/create dimensions for the flat pattern part. Add the bend order table as a note.

Pro/SHEETMETAL has a set of features unique to sheet metal parts. Sheet metal features can be added to a sheet metal part when the part is completely unbent or completely bent in its design condition, or at any stage of bend/unbend in between.

Design the part in the "as defined" condition, not as a flat pattern, unless you know all flat pattern details and dimensions. Add as many bends to the part as possible before adding

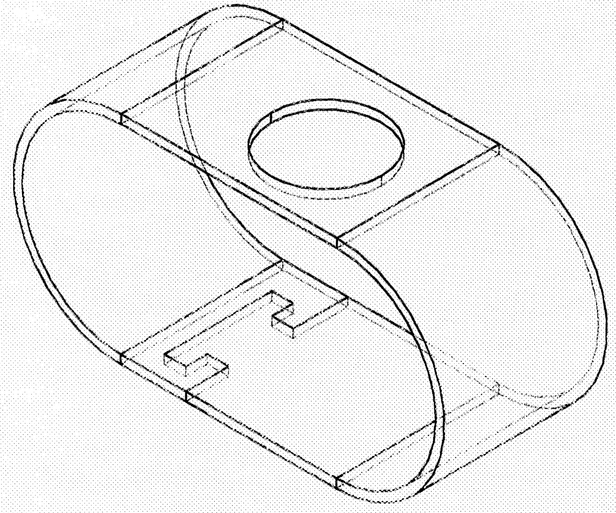

FIGURE F Part with Rip Feature

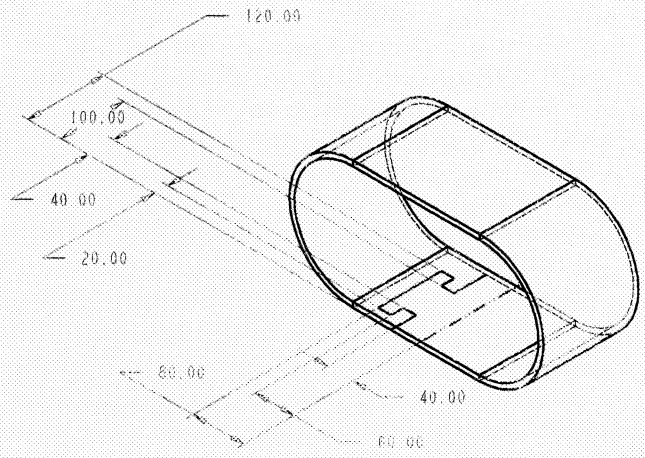

FIGURE H Interlocking Rip Feature

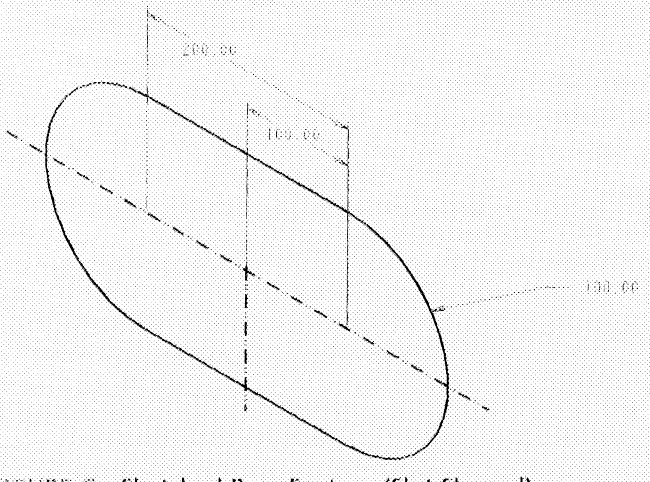

FIGURE G Sketched Base Feature (Slot-Shaped)

other features, since cuts at an angle or through bend areas might require larger dimensions for proper clearance

Bends are added with the bend features, or when adding a wall. Bends can be dimensioned to the inside or the outside of the bend, or to a specified surface regardless of which side of the bend it is. Zero-radius bends create a sharp edge on whichever side they are dimensioned to.

The base sheet metal feature can only be a wall. There are several options for creating a base feature that are not available when adding more walls to the part. The feature forms include the following:

Extrude Sketch the side section of the wall and extrude it a specified depth.

Revolve Sketch the side section of the wall and revolve about the axis.

Bend Create a sheet metal wall by blending several sections sketched in parallel planes.

developed by the same general method as in the previous example. The transition piece is composed of four triangular lateral surfaces whose baselines form the lower base edge of the figure. The corners of the piece are portions of oblique cones. The development is constructed by dividing the surface into triangular areas that approximate the surface of the piece. Each triangle is then laid out in successive order with common elements joined. Note that this and the development in Figure 28.27 are *approximate developments,* since the given forms are basically warped surfaces.

The circumference of the upper base circle is divided into equal parts. Elements that define triangular areas on the conical surface are drawn through the division points and connected to one of the lower base corners. The elements correspond to bend lines when the piece is formed by rolling a flat piece of sheet metal that was cut to the outline of the pattern. Since the lower base is at an angle and the circular base is not centered left to right, as was Figure 28.27, there will be a total of eight separate element lengths to establish before the development can be started. To avoid confusion, two true-length diagrams are drawn, as shown. Revolution could also have helped determine the true lengths of the elements.

The true lengths of the lower base edges can be seen in the horizontal view for the right edge (C-D) and the left edge (A-B). The front edge (line B-C) and the rear edge appear true length in the frontal view. The true-length chord distances of the upper base are transferred directly from the horizontal view to the development.

In Figure 28.28, a half development is constructed, since

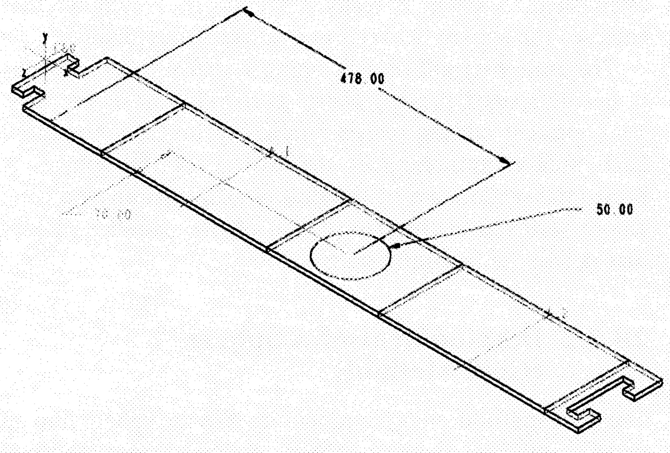

FIGURE I Adding a Hole

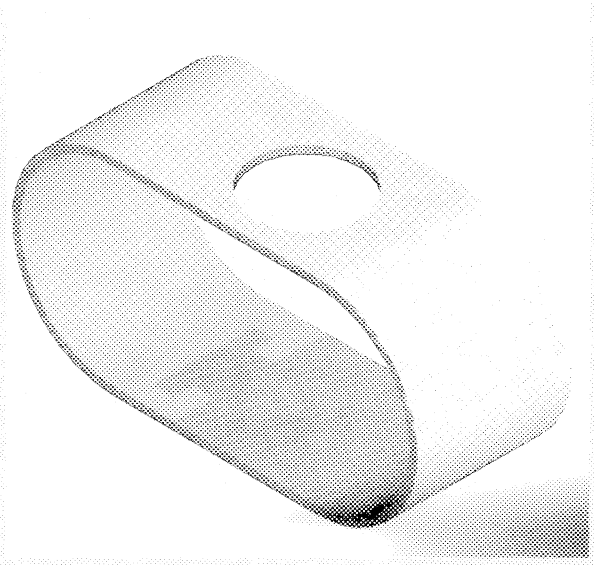

FIGURE K Shaded Illustration

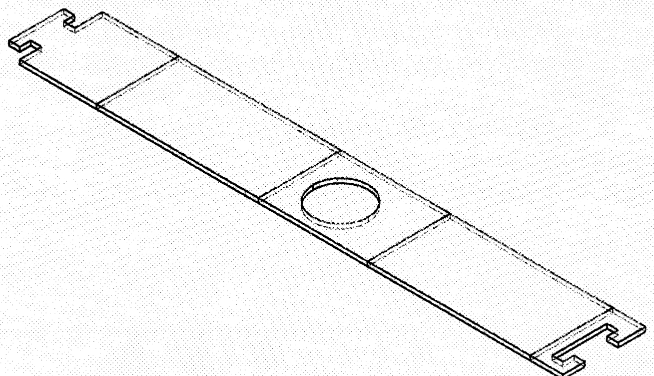

FIGURE J Unfolded Flat Pattern

Flat Sketch the boundaries of the wall.
Advanced Create a sheet metal wall using datum curves, multiple trajectories, etc.

Figure F shows an oblong part that was created as a loop and later ripped to establish a starting edge for unfolding. The 100 × 400 mm slotlike feature was sketched first (Fig. G). The **rip**, designed as an interlocking tab, was then sketched on the appropriate surface (Fig. H). Rips create a zero gap between two edges, as if a saw cut the part but no material was removed in the process. The hole is added last. The sketched hole is placed on the appropriate surface after the part is unfolded (Fig. I). The completed flat pattern is then used for manufacturing (Fig. J). The shaded illustration is shown in Figure K.

the piece is symmetrical. The half development can be flipped over to complete the full pattern. Line D-7 becomes the seam edge line since it is the shortest line. The true lengths of the elements, baselines, and chord distances are used to lay out the development.

Start the development by drawing line A-1. Line A-B is drawn perpendicular to line A-1 to form the first triangular area, A-1-B. Triangle 1-B-2 is laid out next. Complete the half development by laying out each successive triangular area as shown.

You May Complete Exercises 28.9 Through 28.12 at This Time

28.5 DOUBLE-CURVED SURFACES

Double-curved surfaces are divided into two basic types: surfaces of revolution and double-curved surfaces of the general type. General types of double-curved surfaces are composed of curved lines or contours drawn at predetermined spacings. Contour maps, topographic models, and fairing surfaces of ships, airplanes, automobiles, and spacecraft are examples of the general type of double-curved surfaces. **Double-curved surfaces of revolution** are generated by the movement of a curved-line generatrix about a straight-line axis (directrix). Because a double-curved surface is composed solely of curved lines, it is theoretically undevelopable. Approximate developments are constructed from double-curved surfaces by enclosing them in portions of cones and cylinders.

Double-curved surfaces of revolution include the following shapes: sphere, annular torus, spheroid/ellipsoid paraboloid, and the serpentine (spring). A double curved surface is made by stretching flat sheet metal that has been cut to a specific set of patterns until it approximates the desired form. Surfaces of revolution can also be turned on a lathe if the finished piece is to be a solid. In general, the sphere is the most common form of double-curved surface that is developed.

There are no straight lines on a double-curved surface. The intersection of a plane and a double-curved surface, perpendicular to its axis line, cuts a curved element on its surface. A plane passed parallel to its axis cuts a section showing the outline of the piece.

28.5.1 Spheres

Spheres are double-curved surfaces of revolution that are generated by a revolving curved-line (circle) generatrix about a straight-line axis (directrix). Spheres can be developed by many methods. The **gore method** (*meridian method*) divides the surface of the sphere into a number of meridians. A **meridian** is established by passing a plane through the axis of the sphere. Two adjacent radial meridians define a section/panel. Meridians are evenly spaced (radially), so all panels of the development are identical. Since it can serve as a pattern for the remaining sections, only one panel need be established. A panel is really a section of a cylinder that encloses the sphere between two adjacent meridians.

The **zone method** of developing a sphere passes a series of evenly spaced parallel planes perpendicular to the axis. Two adjacent cutting planes establish a horizontal section. Each section approximates the surface of the sphere. A horizontal section can be thought of as a frustum of a cone whose vertex is at the intersection of the extended chords that define the frustum's sides.

28.5.2 Development of a Sphere (Gore Method)

The **gore method** of development divides the sphere into an equal number of sections (**gores**). Sections are established by passing equally spaced vertical planes through the axis. Each plane cuts a meridian on the sphere's surface. Two adjacent meridians form a section. Each section can be considered a section of a cylinder. Because one section can serve as a pattern for the remaining sections, the development of one section is all that is necessary. The greater the number of sections, the more accurate the development and spherically perfect the final piece, but the number of sheet metal pieces to be cut and seams that need be joined will be increased.

In Figure 28.29, the sphere is divided into sixteen evenly spaced sections by passing vertical planes through the point view of the axis in the horizontal view. The frontal view is

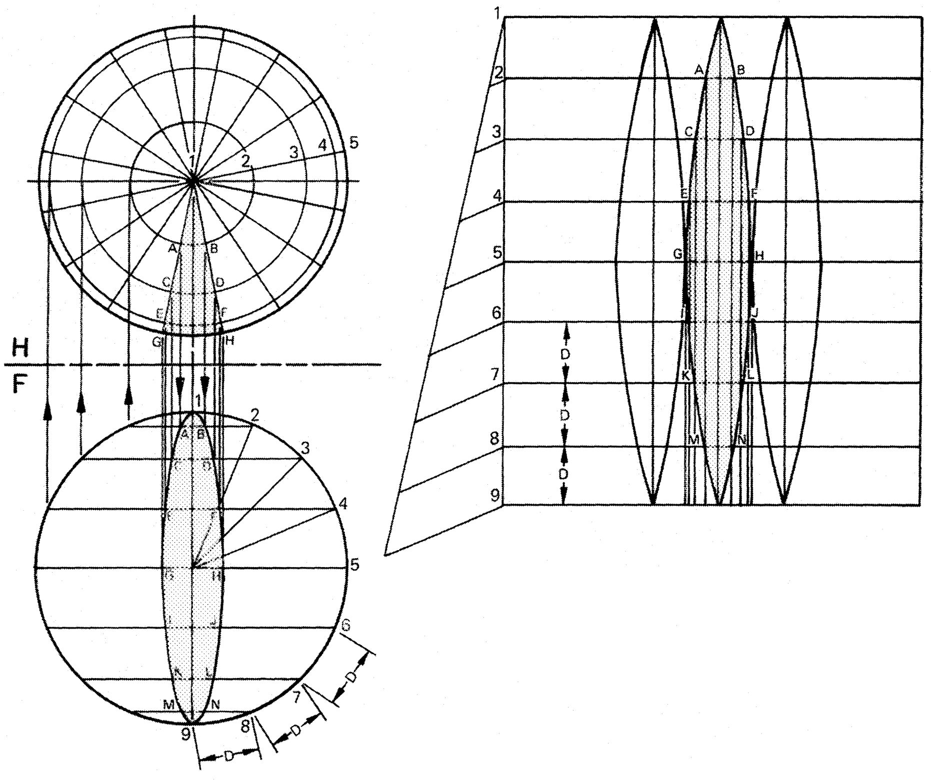

FIGURE 28.29 Sphere Development Using the Gore Method

similarly divided into equal divisions, as shown. Horizontal planes are passed through divisions in the frontal view, 1 through 9. Each horizontal plane appears as an edge in the frontal view and projects as a small-circle element on the sphere in the horizontal view. The chord distance between horizontal planes, dimension D, is equal for all frontal divisions. The vertical planes (meridian elements) and the circle elements intersect in the horizontal view, points A through N. Each intersection point is projected to the frontal view, as shown, to establish the gore (meridian) section.

The development is constructed by unfolding one section/panel. Start the development by drawing the stretch-out line equal to one-half of the sphere's circumference. Divide the stretch-out line into eight equal spaces and label 1 through 9, corresponding to the horizontal divisions. Each division should be equal to dimension D. Points A through N can be transferred to the development along related horizontal lines. The widest part of the section is at the equatorial line (5). Points G and H are transferred from the frontal view by measuring their distance from the axis line, which is the centerline of the section/panel.

Figure 28.30 shows a spherical tank constructed from gore sections. Because the spherical shape provides equal pressure distribution of the vessel's contents, spheres are frequently used in the design of pressure vessels.

28.5.3 Development of a Sphere (Zone Method)

The **zone method** of developing a sphere divides the surface of the sphere into horizontal zones. This procedure approximates the surface of a sphere by enclosing each horizontal zone in a right circular cone. Each zone is really a frustum of a cone. The development consists of developing successive frustums.

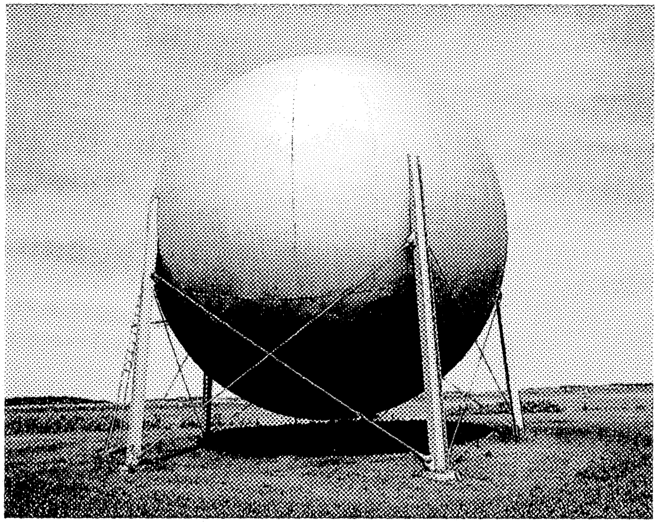

FIGURE 28.30 Vessel Constructed of Welded Gore Sections

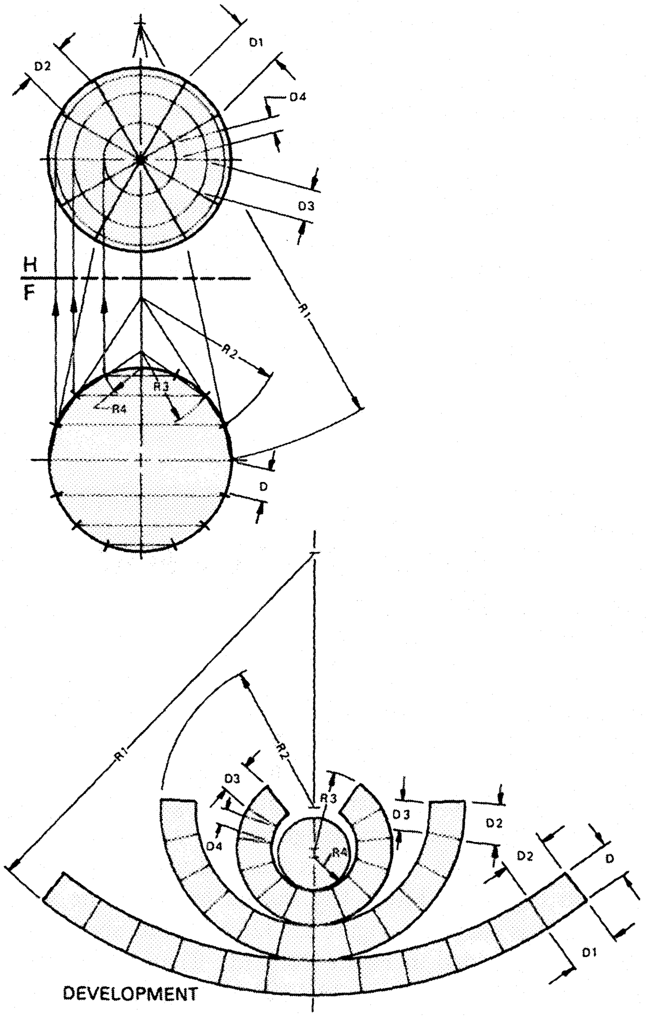

FIGURE 28.31 Development of a Sphere Using the Zone Method

In Figure 28.31, the sphere is divided into sixteen equal spaces along its circumference. Horizontal planes are passed through the divisions to define the upper and lower bases of the frustum. The horizontal projection of the plane sections are small-circle elements on the sphere's surface. Two adjacent parallel plane sections define a zone. Dimension D is the chord distance between divisions. Related chords are extended to locate the vertex of their respective cones. R1, R2, R3, and R4 are the slant heights of the cones. Slant heights are used to swing a true-length arc when drawing the development.

In the horizontal view, the sphere is divided into equal parts by passing vertical cutting planes through the point view of the axis line. Each vertical plane cuts an element on the sphere's surface. The intersection of straight-line elements and the circle elements in the horizontal view determines dimensions D1, D2, D3, and D4.

Start this development by drawing the centerline from which all true-length radii are swung. Swing arc R1 to locate the development outline for the largest frustum (zone).

Dimension D establishes the inside outline of the largest frustum (zone). D1 and D2 establish the true length of the zone's arc. Repeat this procedure, drawing R2 tangent to the inside development line of the first zone. D2 and D3 establish the second zone's development arc length. R3 is swung tangent to the inside of the second zone's outline, and D3 and D4 determine the total development arc length. R4 completes the development, being swung so as to be tangent to the inside of the third zone's outline. The fourth zone, as defined by R4, is a circle. *Note: Dimension D represents the thickness for all zones; that is, R1 – R2 = D, R2 – R3 = D, and R3 – R4 = D.*

28.6 CAD AND THE DEVELOPMENT OF FLAT PATTERNS

CAD systems were originally limited to parallel-line, radial-line, and transition pieces requiring triangulation for development of flat patterns. Development programs now allow you to create a 3D model and to request the system to develop the piece as a flat pattern. In Figure 28.32(a), a sheet metal enclosure was designed with a parametric 3D CAD/CAM program. The part is designed using the dimensions in Figure 28.32(b). The shaded image of the sheet metal part is shown in Figure 28.32(c), and its shaded flat pattern is provided in Figure 28.32(d). The enclosure has been redesigned in Figure 28.33(a) by adding side walls, top, and vent holes for cooling and by changing the side tab sizes [Fig. 28.33(b)]. A opening has been added by cutting out the side panel [Fig. 28.33(c)]. The completed project is shown in Figure 28.33(d). The next step in documenting the

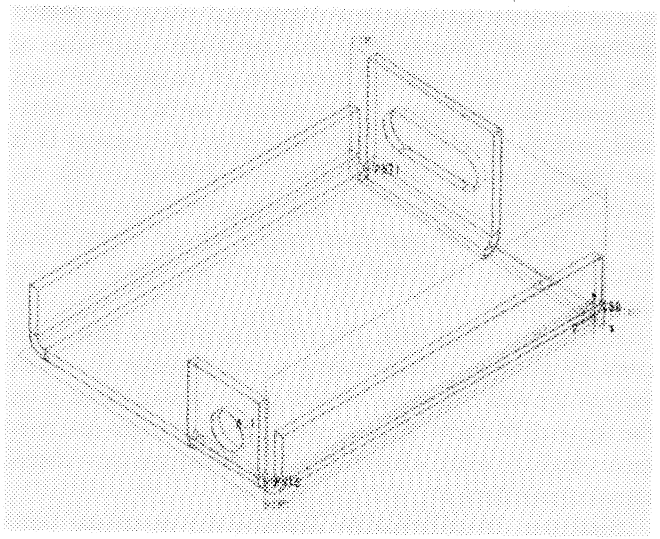

(a) Parametric 3D model of sheet metal enclosure

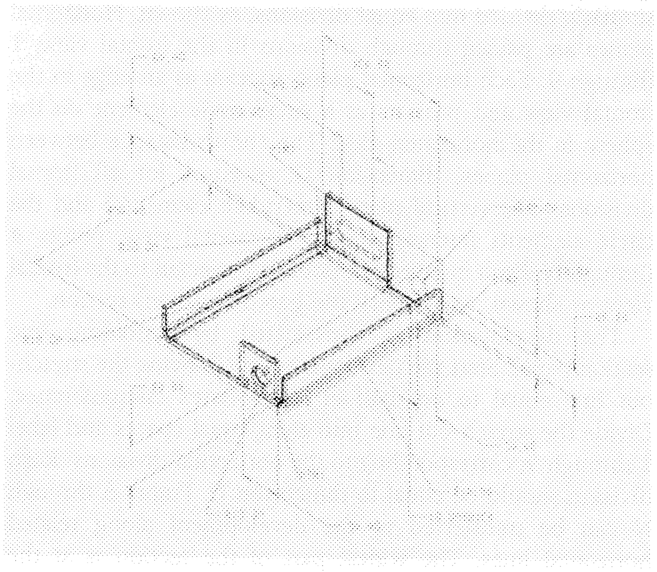

(b) Parametric dimensions

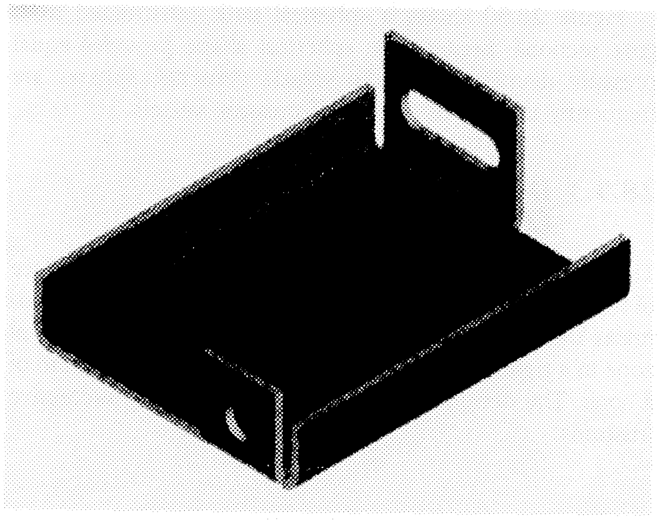

(c) Shaded model of final part

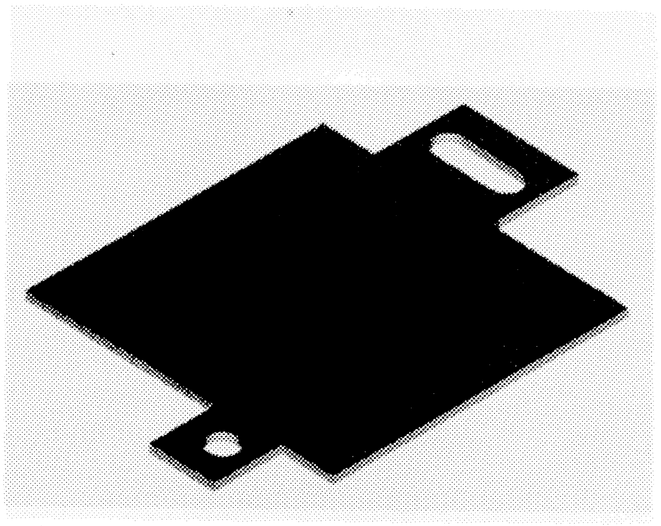

(d) Unfolded plate pattern

FIGURE 28.32 **Sheet Metal Design**

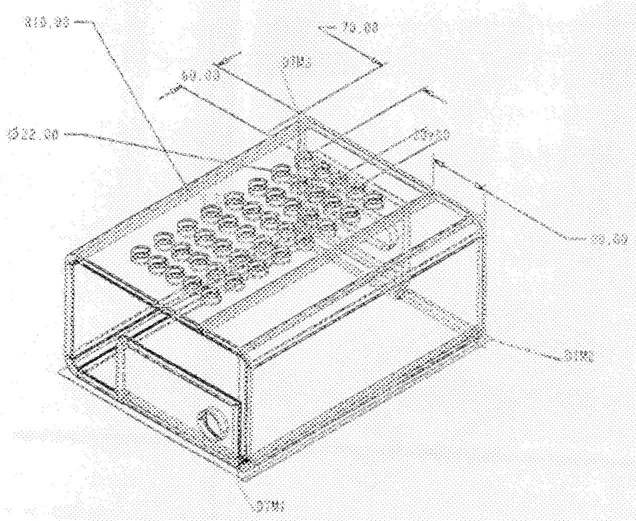

(a) Variation of sheet metal enclosure with additional sides, top, ventilation holes, and tabs

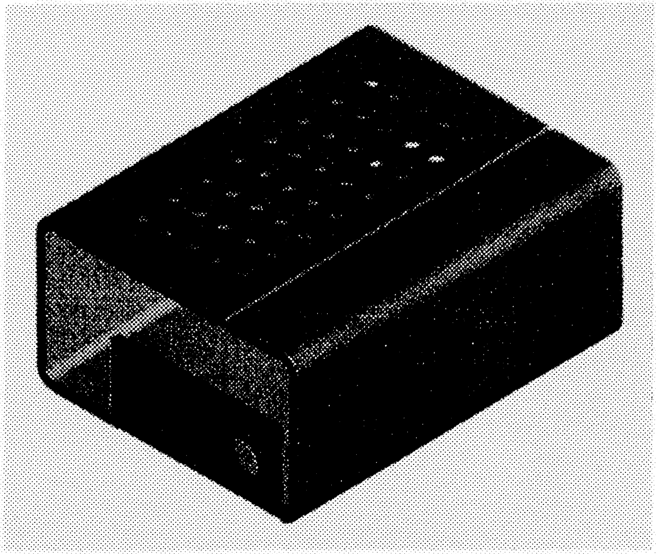

(b) Shaded image of design

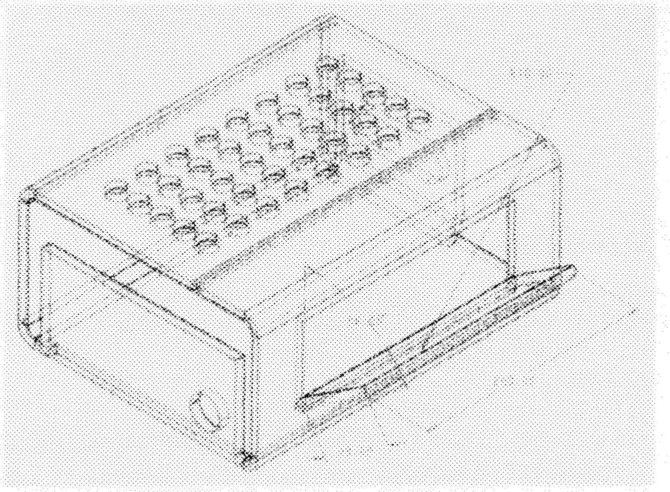

(c) Modified side panel

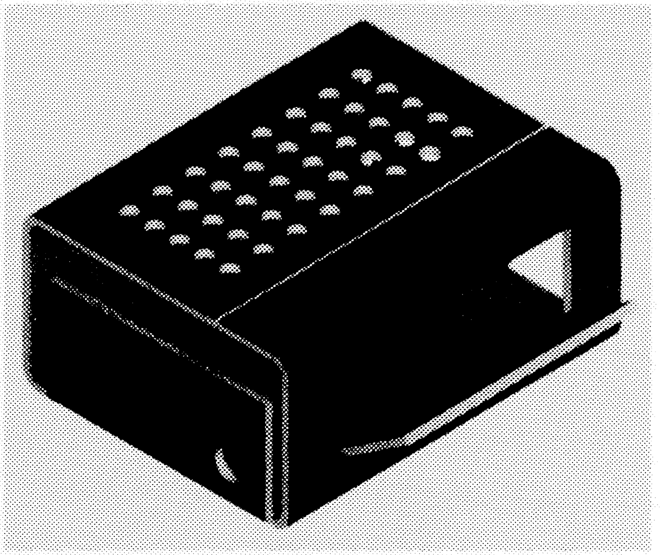

(d) Shaded image of completed design

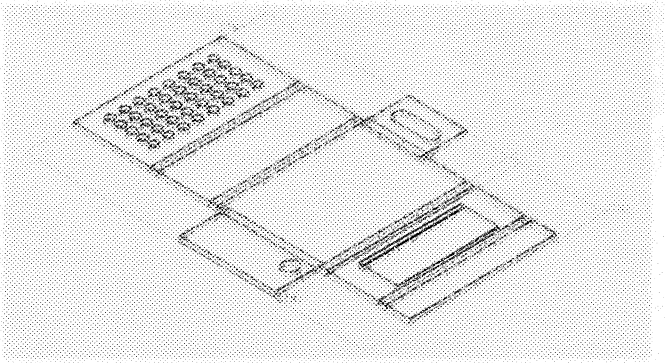

(e) Unfolded flat pattern

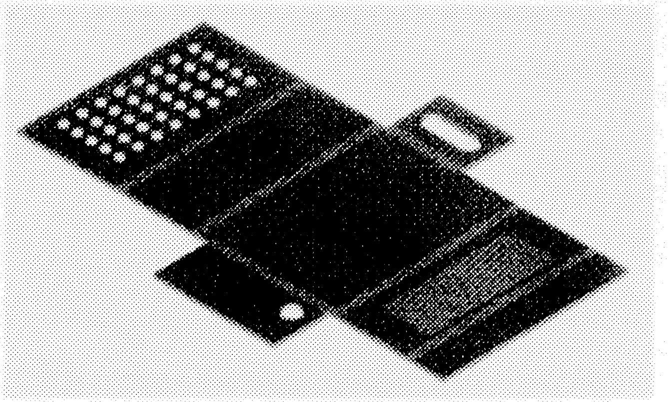

(f) Shaded image of flat pattern

FIGURE 28.33 Modified Sheet Metal Design—*Continues*

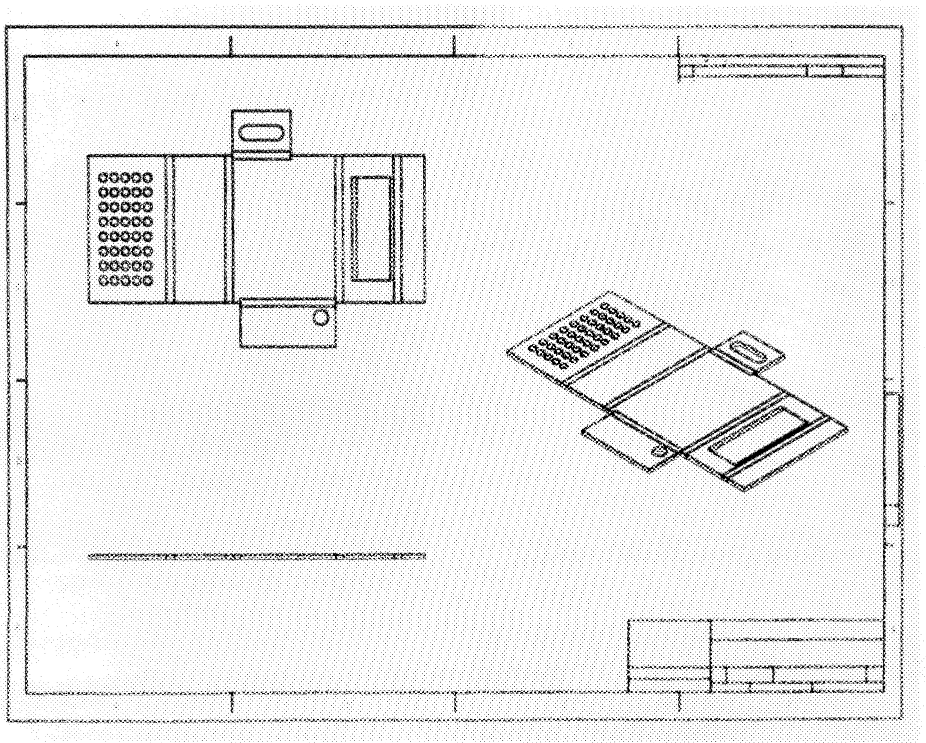

(g) Flat pattern shown in views on "C"-size sheet

FIGURE 28.33 Modified Sheet Metal Design—*Continued*

design is requesting a flat pattern [Figs. 28.33(e) and (f)]. The part is shown on a "C"-size format in Figure 28.33(g), and is now ready for detailing.

Two-dimensional development programs are also available, but either they require the construction techniques found in manual drafting or the pattern is assembled from polygon elements. Both 2D and 3D CAD flat pattern programs can calculate bend allowances. 3D systems additionally can create bend tables in which the part is bent sequentially according to defined bend angles.

QUIZ

True or False

1. The stretch-out line should always be drawn perpendicular a the object's lateral true-length edges.
2. Developments of spheres and warped surfaces are true developments.
3. A pattern is composed of true-length lines.
4. Cylinders and cones are considered single-curved surfaces.
5. An oblique cone has an axis that is perpendicular to its base.
6. Spheres are double-curved surfaces and must be developed approximately.
7. The gore method divides the sphere into a number of zones for laying out the development.
8. The first step in drawing a parallel-line development is to find the true lengths of each face and edge.

Fill in the Blanks

9. Most developments should be unfolded with the ________ ________.
10. The length of a cylindrical development is ________ to its ________.
11. Transition pieces join ________ or ________ geometric forms of ________ ________.
12. A cylinder is generated by a ________ ________ generatrix.
13. Curved surfaces fall into two general categories: ________ and ________.
14. ________ surfaces are also considered ruled ________.
15. The generatrix moves according to the ________.
16. Sheet metal is designated by ________ ________ for sizes smaller than ________.

Answer the Following

17. Name six different types of seams.
18. Describe the types of shapes developed by triangulation.
19. What is an approximate development?
20. What is a TL diagram?
21. What are the four types of developments?
22. Describe the difference between a double-curved and a single-curved surface.
23. Why is a right section required for parallel-line developments?
24. What is a transition piece?